CATALOG

Steel Boxes, Covers, and Accessories

Section A

Table of Contents

Steel Boxes, Covers, and Accessories

Non-Metallic Boxes, Covers, and Accessories

Floor Boxes

RACO® Steel Boxes, Covers & Accessories

- General Information A-2
- Box Selection A-6
- 4″ Square Boxes. A-9
- 4″ Square Covers A-23
- Stud Mount Mud Rings A-25
- Hinged Mud Rings A-26
- Adjustable Mud Rings. A-27
- Universal Stud Mount Brackets. A-29
- 4″ Square Partitions & 4″ Square Fixture Covers A-31
- 4″ Square Exposed Work Covers A-32
- 4-11/16″ Square Boxes. A-33
- 4-11/16″ Square Mud Rings,Covers and Partitions. A-38
- 4-11/16″ Square Exposed Work Covers A-40
- Life Support Products. A-42
- Large Capacity Boxes & Covers A-44
- Transition Boxes. A-46
- Grand Slam Box A-47
- Ceiling Fan & Fixture Support Products A-49
- Ceiling Pans A-51
- Ceiling Boxes & Covers. A-53
- Handy Boxes & Covers A-61
- Two Device Handy/Switch Boxes & Covers A-63
- 3″ x 2″ Switch Boxes A-64
- Shallow Switch Boxes A-70
- Multidevice Switch Boxes. A-71
- Multigang Boxes, Covers, and Partitions. A-72
- Concrete Rings & Covers A-75
- Masonry Boxes & Support A-76
- Box Support Products A-79
- Accessories for Steel Boxes. A-84
- Protector Plates A-86
- Box Grounding Products A-87
- Detailed Drawings A-88

RACO® Non-Metallic Cable Boxes

- General Information A-95
- Non-Metallic Cable Boxes A-96
- Non-Metallic Cable Boxes/Vapor Barrier A-103
- Detailed Drawings A-104

RACO® Floor Boxes

- General Information A-107
- Quick Selection Guide A-109
- Non-Metallic Floor Boxes A-111
- Floor Box Covers & Flanges A-113
- Accessories & Replacement Covers. A-118
- Above Floor Service & Accessories A-119
- Detailed Drawings A-120

General Information

Standards, 2023 National Electrical Code®

Applications: Steel Boxes

RACO® high-quality steel boxes:

- Are used in branch circuit wiring
- Accommodate wiring devices, such as switches and receptacles
- Most may also serve as fixture supports
- Provide excellent protection for wiring system or devices
- Must be closed with a cover, light fixture canopy or wallplate
- Permit access to conductors for maintenance
- Allow for branch circuit runs
- Provide two-hour fire rating for 4x4 or smaller wall opening

Product Features: Outlet Boxes for Fixture or Fan Support

These high-quality boxes:

- Are listed to support lighting fixture canopies or fans
- Feature oversized #10 screws to provide strength and rigidity

Product Features: TKO® Knockouts

- TKO® knockouts offer greater flexibility with RACO® combination 1/2" and 3/4" knockout
- Stock just one product instead of two or three
- One product for the installer to carry

TKO Provides Reliable Grounding Path

- Independent tests conducted by UL prove that the TKO passes the same high-current fault test used to test grounding bushings and ground lugs
- RACO® TKO knockout is UL Listed, providing bonding without the use of bonding jumpers
- Suitable for bonding without any additional bonding means around concentric (or eccentric, TKO) knockouts when used in circuits above or below 250V
- This knockout does not impair the electrical connection to ground

Most RACO® Boxes Have At Least One Tapped #10-32 Grounding Hole

- The products that do not have a grounding screw hole are plenum boxes catalog numbers 226 and 239

Product Features: Combination Screw Heads

- Cover and clamp screws have combination slotted/Phillips heads
- Self-tapping screws provide for 100% thread engagement

Metallic Boxes: Fire Resistance Rating Wall Penetrations*

Listed single and double gang metallic outlet and switch boxes with metallic or non-metallic cover plates, also metallic 4x4 and octagon boxes may be used in bearing and non-bearing wood stud and steel stud walls, and floor-ceiling and roof-ceiling assemblies with ratings not exceeding two hours.

The surface area of individual metallic outlet or switch boxes shall not exceed 16 square inches through a fire rated wall. The aggregate surface area of the boxes shall not exceed 100 square inches per 100 square feet. Boxes located on opposite sides of walls or partitions shall be separated by a horizontal distance of 24 inches.

The metallic outlet or switch boxes shall be securely fastened to the studs, and the opening in the wallboard facing shall be cut so that the clearance between the box and the wallboard does not exceed 1/8 inch.

** Reference: Fire Resistance Ratings ANSI/UL 263, Sec. III-6.*

Standard Materials: Steel Covers, Outlet and Standard Switch Boxes

- Steel boxes and covers are made of .0625 inch thick pre-galvanized sheet steel
- Handy Box covers are made of .030 inch thick galvanized sheet steel

Compliances

RACO® steel boxes and covers generally carry the following compliance ratings. Check specific catalog pages for individual compliances.

- UL Listed – Standard 514-A, file E195978 ("QCIT" Category)
- Boxes and covers are listed for their Electrical Applications (electrical codes), UL Electrical Construction Equipment Online Directory (electrical codes).
- Boxes are listed for Fire Resistance Directory, including the Two-Hour Fire Rating, (building codes) UL Orange Book
- UL Classified Standard – UL263 file R16536, CEYY, QBWY
- CSA Certified – C22.2 #18, CSA File LR-1082
- ANSI/NEMA OS1
- Federal Manufacturer's number 28488

For installation guidelines and to learn more about RACO® products, visit the NEMA website at http://www.nema.org.

The National Electrical Manufacturers Association (NEMA) website is a valuable electrical resource providing the information you need - quickly.

Wiring Capacity: Steel Outlet and Switch Boxes; Cubic Inches

Maximum Number of Conductors or Minimum Size Box Required – National Electrical Code Article 314.16 (A and B) also Table 314.16(A)

The purpose of NEC® Article 314.16 is to determine the maximum conductor count or the minimum box size required for an application. It also may be used to determine how many other conductors may be added without exceeding the Code-prescribed limit.

Standards, 2023 National Electrical Code®

Most applications have determined the number of conductors. The question that then remains is the smallest (minimum) size box that is permitted. The rules of Article 314.16 are to be used to determine the Code-recognized limit.

Selection of an outlet or junction box for use in an electrical circuit work must take into consideration the maximum number of wires permitted in the box. Safe electrical practice demands that wires not be jammed into boxes because of the possibility of nicks, abrasions or other damage to the insulating material, creating the potential for ground faults or short circuits.

Article 314 – Boxes and Fittings

NEC® 314.16 (A and B) also Table 314.16(A). Number of Conductors in Outlet, Device, and Junction Boxes, and Conduit Bodies.

Boxes shall be of sufficient size to provide free space for all enclosed conductors. In no case shall the volume of the box, as calculated in (a) below, be less than the fill calculation as calculated in (b) below. The minimum volume for conduit bodies shall be as calculated in (c) below.

The provisions of this section shall not apply to terminal housings supplied with motors. See Section 430.12.

Boxes and conduit bodies enclosing conductors, size #4 or larger, shall also comply with the provisions of Section 314-28.

(a) Box Volume Calculations. The volume of a wiring enclosure (box) shall be the total volume of the assembled sections, and, where used, the space provided by plaster rings, domed covers, extension rings, etc., that are marked with their volume in cubic inches or are made from boxes the dimensions of which are listed in Table 314.16(A).

(1) Standard Boxes. The volume of standard boxes that are not marked with a cubic inch capacity shall be as given in *Table 314.16(A).

(2) Other Boxes. Boxes 100 cubic inches (1,640 cu. cm3.) or less, other than those described in table, and non-metallic boxes shall be durably and legibly marked by the manufacturer with their cubic inch capacity. Boxes described in table that have a larger cubic inch capacity than is designated in the table shall be permitted to have their cubic inch capacity marked as required by this section.

(b) Box Fill Calculations. The volumes in paragraphs (1) through (5) below, as applicable, shall be added together. No allowance shall be required for small fittings such as locknuts and bushings.

(1) Conductor Fill. Each conductor that originates outside the box and terminates or is spliced within the box shall be counted once, and each conductor that passes through the box without splice or termination shall be counted once. The conductor fill, in cubic inches, shall be computed using Table 314.16(B)(1). A conductor, no part of which leaves the box, shall not be counted.

Exception: Where an equipment grounding conductor or not over four fixture wires smaller than #14, or both, enter a box, from a domed fixture or similar canopy and terminate within that box, it shall be permitted to omit these conductors from the calculations.

(2) Clamp Fill. Where one or more internal cable clamps, whether factory or field supplied, are present in the box, a single volume allowance in accordance with NEC® 314.16(B)(2) shall be made based on the largest conductor present in the box. No allowance shall be required for a cable connector with this clamping mechanism outside the box.

(3) Support Fittings Fill. Where one or more fixture studs or hickeys are present in the box, a single volume allowance in accordance with NEC® 314.16(B)(3) shall be made for each type of fitting based on the largest conductor present in the box.

(4) Device or Equipment Fill. For each yoke or strap containing one or more devices or equipment, a double volume allowance in accordance with NEC® 314.16(B)(4) shall be made for each yoke or strap based on the largest conductor connected to a device(s) or equipment supported by that yoke or strap.

(5) Equipment Grounding Conductor Fill. Where one or more equipment grounding conductor(s) enter(s) a box, a single volume allowance in accordance with Table 314.16B shall be made based on the largest equipment grounding conductor present in the box. Where an additional set of equipment grounding conductors, as permitted by NEC® 314.16(B)(5) are present in the box, an additional volume allowance shall be made based on the largest equipment grounding conductor in the additional set.

National Electric Code® and NEC® is a registered Trademark of the National Fire Protection Association.

General Information

Standards, 2023 National Electrical Code®

Most Often Requested Sections of the National Electrical Code®	How RACO® Products Help Complete the Installation
250.97 Method of Bonding Service Equipment — Bonding Jumpers. Bonding jumpers are not required for concentric and eccentric knockouts if they are listed.	This Section is used to ensure that there is ground continuity when a concentric or eccentric knockout incorporated in a box. A bonding jumper is not required when using any of the RACO® patented TKO knockout boxes.
314.27 (A) Boxes at Lighting Fixture Outlets. Boxes to support light fixtures must be listed for fixture support.	Device boxes use #6-32 screws to secure devices such as snap-switches and receptacles. They are not suitable for support of other than very lightweight lighting fixtures, such as some wall-bracket types.
314.27 (B) Floor Boxes. Boxes listed specifically for this application shall be used for receptacles located in the floor. Exception: Boxes located in elevated floors of show windows and similar locations where the authority having jurisdiction judges them free from physical damage, moisture and dirt.	Only boxes that are UL Listed for the application may be fastened into the floor. RACO® floor boxes are in Section A of this catalog.
314.27 (C) Boxes at Fan Outlets. Boxes at Ceiling-Suspended (Paddle) Fan Outlets. Outlet boxes or outlet box systems used as the sole support of a ceiling suspended (paddle) fan shall be listed, shall be marked by their manufacturer as suitable for this purpose, and shall not support ceiling-suspended (paddle) fans that weigh more than 32kg (70lb).	For any ceiling outlet that is intended to have a ceiling (paddle) fan installed, a UL Listed outlet box rated for ceiling fan support must be installed. RACO® offers a complete line of products designed for various applications and mounting needs.
314.16 (A)(3) Space for Conductors. Canopies and outlet boxes taken together shall provide adequate space so that fixture conductors and their connecting devices can be properly installed.	When calculating the minimum cubic inch requirements for an outlet box, the canopy may be included in the calculation at the discretion of the Authority Having Jurisdiction. If the canopy of the fixture/fan is marked with the cubic inch capacity, then the additional volume must be accepted by the Authority Having Jurisdiction.

Standards, 2023 National Electrical Code®

Most Often Requested Articles of the 2020 National Electrical Code®	How RACO® Products Help Complete the Installation
314.27 (B) Maximum Luminaire Weight. Fixtures greater than 50 pounds cannot be supported by a fixture box unless additional independent support is provided.	All outlet boxes that are intended to be used with fixtures are tested in accordance with UL Standard 514A.
250.146 (A) Surface-Mounted Box. Where the box is mounted on the surface, direct metal-to-metal contact between the device yoke and the box or a contact yoke or device that complies with 250.146(B) shall be permitted to ground the receptacle to the box.	This new method provides better bonding for the cover. RACO flat corner covers and mud rings comply.
800.133 Exception (A)(1)(d) Installation of Communications Wires, Cables and Equipment – Electric Light or Power Circuits. Communications conductors shall not be placed in any raceway, compartment, outlet box, junction box, or similar fitting with conductors or electric light or power circuits or Class 1 circuits.	When power and voice/data are brought to one enclosure, a means of dividing the wiring is required. Voltage barriers are available on the following box types: 4" and 4-11/16" square boxes, three- and four-gang switch boxes, masonry boxes, and gang boxes.
406.12, Tamper-resistant Receptacles. In all areas specified in 406.12(1) through 406.12(8), all 125 volt, 15 and 20 amp receptacles shall be listed tamper-resistant receptacles.	This is to prevent shocks to small children that like to insert keys, paper clips, etc. into the receptacle slots.
314.24 (B) Depth of Boxes. Minimum depth of boxes for outlets, devices, and utilization equipment.	Boxes must be a minimum depth depending on their use and/or are required to have a minimum clearance behind the device or equipment of per 314.24 (B).

Box Selection

Calculate the Minimum Size Box

NEC® 314.16 (A) and (B) describes the detailed way of counting wires, as well as clamps, fittings or devices (i.e., switches, receptacles, combination devices) by establishing an equivalent conductor value for each. Those values are added together to get a total number of conductors. The minimum size box is the smallest one in Table 314.16(A) that can accommodate that number of conductors.

1. No matter how many ground wires come into a box, they only count as one conductor within the box.
2. Any wire 12 inches or less in length running unbroken through the box counts as one wire.
3. Each wire coming into a splice device (crimp or twist-on type) is counted as one wire.
4. Each wire coming into the box and connecting to a device counts as one wire of that size.
5. Fixture studs, cable clamps and hickeys are to be counted as one for each type of fitting. If a box contains two cable clamps, the total is only to be increased by one.
6. Where devices are mounted in the box, the total conductor count must be increased by two for each mounting strap.

Example #1: – Conduit Boxes: Supply power to a switch that will control a remote light with #14-2 conductors. Metal conduit and fittings will be used as the wire way. You must provide space for four conductors, one ground, and one switch, totaling 6. Read across the line "Allowances" in the Box Fill table to column 6, then read down to the minimum cubic inches required for #14 conductor. This example requires a minimum of 14.0 cubic inches.

Example #2: – Cable Boxes:

This example will illustrate how the minimum size is determined for a box with cable clamps fed by two #12-2 non-metallic sheathed cables and supplying a 15A duplex receptacle. After supplying the receptacle, the conductors are extended to other outlets.

Circuit conductors 4

Ground conductors 1
Cable clamps 1
Device (receptacle) 2

Total **8**

Using the Box Fill table from the next page, read across the line "Allowances" to column 8, then down to the minimum cubic inches required for #12 conductor. This example requires a minimum of 18.0 cubic inches.

Steel Box Selection Chart

Cubic Inches: 76.0 | 42.0 | 30.3 | 29.5 | 21.5 | 21.0 | 18.0

Conduit Steel Boxes

5" Sq. 3-1/4" Deep (Inside)	**4-11/16" Sq.** 2-1/8" Deep (Inside)	**4" Sq.** 2-1/8" (Depth Inside)	**4-11/16" Sq.** 1-1/2" (Depth Inside)	**4" Oct.** 2-1/8" (Depth Inside)	**4" Sq.** 1-1/2" (Depth Inside)	**Switch** 3-1/2" (Depth Inside)

Cubic Inches: 30.3 | 42.0 | 21.5 | 21.0 | 18.0

MC/BX & Non-Metallic Cable Steel Boxes

4" Sq. 2-1/8" (Depth Inside)	**4-11/16" Sq.** 2-1/8" (Depth Inside)	**4" Oct.** 2-1/8" (Depth Inside)	**4" Sq.** 1-1/2" (Depth Inside)	**Switch** 3-1/2" (Depth Inside)

Clamp Types

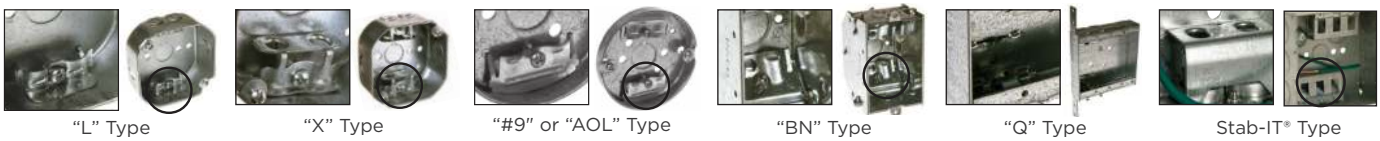

"L" Type | "X" Type | "#9" or "AOL" Type | "BN" Type | "Q" Type | Stab-IT® Type

Knockouts and Prioutes

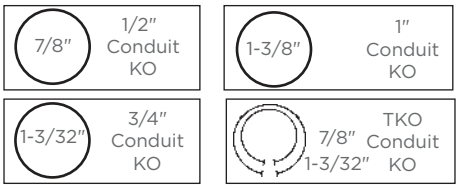

Cable Prioutes Always In Pairs.

Plaster Ears

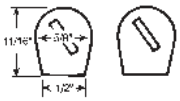

Flat-bottomed cable prioutes eliminate chance of cable being cut.

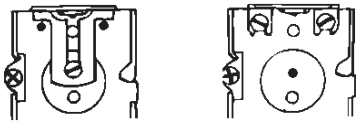

One-Screw Ear | Two-Screw Ear

Adjustable plaster ears are included on many switch boxes and one octagon box. They are set forward 1/32".

Box Selection

Box Fill

Conductor Size (AWG)	Volume Per Conductor		Allowances								
	CM³	IN.³	6	7	8	9	10	11	12	13	14
#18	24.6	1.50	9.00	10.50	12.00	13.50	15.00	16.50	18.00	19.50	21.00
#16	28.7	1.75	10.50	12.25	14.00	15.75	17.50	19.25	21.00	22.75	24.50
#14	32.8	2.00	12.00	14.00	16.00	18.00	20.00	22.00	24.00	26.00	28.00
#12	36.9	2.25	13.50	15.75	18.00	20.25	22.50	24.75	27.00	29.25	31.50
#10	41.0	2.50	15.00	17.50	20.00	22.50	25.00	27.50	30.00	32.50	35.00
#8	49.2	3.00	18.00	21.00	24.00	27.00	30.00	33.00	36.00	39.00	42.00
#6	81.9	5.00	30.00	35.00	40.00	45.00	50.00	55.00	60.00	65.00	70.00

Cubic Inches: 16.5 15.5 14.0 13.0 12.5 3.8 6.0

Handy
2-1/8" (Depth Inside)

4" Oct.
1-1/2" (Depth Inside)

Switch
2-3/4" (Depth Outside)

Handy
1-7/8" (Depth Outside)

Switch
2-1/2" (Depth Outside)

3-1/2" Rnd. Pan
1/2" (Depth Inside)

4" Rnd. Pan
1/2" (Depth Inside)

Cubic Inches: 15.8 15.5 14.0 12.5 4.0

Switch
2-9/64" (Depth Outside)

4" Oct.
1-1/2" (Depth Inside)

Switch
2-3/4" (Depth Outside)

Switch
2-1/2" (Depth Outside)

3-1/2" Pan
1/2" (Depth Inside)

Clamp Technical Data

Clamp Type	Raceway Type					
	Armored Cable (BX)		Metal Clad Cable Interlocking (MCI)		Non-Metallic Sheathed Cable	Flexible Metal Conduit
	Steel	Aluminum	Steel	Aluminum		
"L" Type	—	—	—	—	#14-2 to #10-3 W/Ground	—
"X" Type	#14-2 (.444 In Outer Diam.) to Largest Size to Fit In Clamp	#14-2 (.444 In Outer Diam.) to Largest Size to Fit In Clamp	.425 to .600 Outer Diam.	.400 to .495 Outer Diam.	—	3/8" Trade Size
"#9" or "AOL" Type	—	—	—	—	#14-2 W/Ground	—
"Q" Type	—	—	—	—	#14-2 to #10-3 W/Ground	—
"BN" Type	—	—	—	—	#14-2 W/Ground Or #12-2 W/Ground	—
Stab-IT Type	.400 to .605 Outer Diam.	.400 to .605 Outer Diam.	.400 to .605 Outer Diam.	.400 to .605 Outer Diam.	—	3/8" Trade Size

Box Selection

Bracket Technical Data

Bracket Type	"A"	"B"	"D"	"FH"	"FM"	"FS"	"J"	"LB"	"MS"	"TS"	"W"	"H" or "M"
Length (In.)	6-7/16"	1-61/64"	6-1/4"	6-61/64"	7-5/8"	6-61/64"	2-3/8"	1-31/32"	4-1/2"	7"	6-25/32"	3-1/8"
Width	5/8"	2"	21/32"	1-9/16"	1-9/16"	1-9/16"	2-23/32"	3-3/64"	1-1/2"	1-1/16"	1-1/16"	7/8"
Offset				3/8"	3/8"	3/8"	1/4"			17/64"	1-5/16"	3/8"
For Metal	✓		✓		✓	✓			✓	✓	✓	✓
For Wood	✓	✓	✓	✓	✓	✓	✓	✓		✓	✓	✓

"A" Bracket Positions handy box against face and side of stud.

"FH" Bracket Side-mount bracket with hooks that drive into face of stud.

"D" Bracket Mounts on flat side of stud.

Box-Loc® "MS" Bracket Positions box on either side of stud. BOX-LOC® (MS) Bracket Box is a snap to install. Place the bracket on the open side of the stud first. Slots in the bracket engage the lip of the stud and actually crimp it as you press the bracket on the stud. Barbed hooks dig into the flat side of the stud, quickly locking it into place.

"J" Bracket Spurs, slotted holes for toe-nailing. Gauging notches at 3/8" and 1/2".

"UBS" Support Universal Back Side support to provide bracing on back of box for wall cavities 2-1/2" - 6" thick.

Ultimate G Series Box Support provide bracing of back of the box for wall cavities 2-1/2" -6" thick.

"W" Bracket Positions box away from side of stud to clear the trim molding of a door frame.

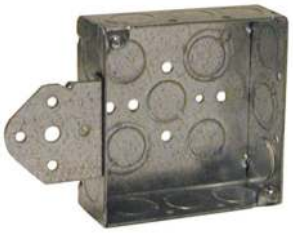

"B" Bracket Face mounts on front edge of wood stud. Use when space between studs is limited.

"FM" Bracket Mounts on flat side of stud.

"LB" Bracket Face mounts on front edge of wood stud. Use when space between studs is limited. 5/8" offset to clear narrow door molding.

"TS" Bracket Side-mount bracket for octagon, square, switch and handy boxes. Gauging tabs and recessed nailing spurs.

"M" Bracket Brackets on both/opposite sides of box

"FS" Bracket Mounts on flat side of stud. Gauging tabs and recessed nailing spurs.

"H" Bracket Narrow bracket allows side-by-side mounting on stud. Positioning tabs locate box perfect distance from stud. V notch centers box. Dimples protect flush drywall installation.

4” Square Boxes – Drawn with Conduit KOs

NEW

185

190, 8190

191, 8191

192, 8192

204

232D

Applications

- RACO® Boxes are installed in walls or ceilings for lighting fixtures, switches or receptacles
- Square boxes are used where multiple conductor runs are split into two or more directions to bring power to a number of electrical devices
- Drawn boxes are ideal for exposed work applications

Product Features

- Combination screw heads provide
- Thru-the-wall box is designed for shallow wall applications and allows for attachment of wall plate to both faces of box

Compliance

- UL LISTED
- All RACO UL listed steel boxes are acceptable for use in 2 hr. fire rated floor-ceiling and roof-ceiling assemblies, as well as 2 hr. fire rated bearing and non-bearing wood stud and steel stud walls. For additional information consult Fire Resistance Ratings ANSI/UL 263, Sec. III-6

4” Square Boxes

CAT. #	Description	Cubic Inches (CM³)	Knockouts		Std. Pkg.	Bar Code
			Sides Conduit	Bottom Conduit		
1-1/4” Deep – *Drawn with Conduit KOs*						
185	—	18.0 (295.0)	(10) 1/2″	(5) 1/2″	50	IIIIIIII
1-1/2″ Deep – *Drawn with Conduit KOs*						
190	Raised Ground	21.0 (344.1)	(12) 1/2″	(4) 1/2″	50	—
8190	Raised Ground	21.0 (344.1)	(12) 1/2″	(4) 1/2″	50	IIIIIIII
191	Raised Ground	21.0 (344.1)	(8) 3/4″	(1) 1/2″, (3) 3/4″	50	—
8191	Raised Ground	21.0 (344.1)	(8) 3/4″	(1) 1/2″, (3) 3/4″	25	IIIIIIII
192	Raised Ground	21.0 (344.1)	(8) 1/2″, (4) 3/4″	(2) 1/2″, (2) 3/4″	50	—
8192	Raised Ground	21.0 (344.1)	(8) 1/2″, (4) 3/4″	(2) 1/2″, (2) 3/4″	50	IIIIIIII
Thru-the-Wall Box, 1-1/2″ Deep – *Drawn with Conduit KOs*						
204	—	22.5 (368.7)	(8) 1/2″, (4) 3/4″	—	50	—
2-1/8” Deep – *Drawn with Conduit KOs*						
232D	Raised Ground Bump	30.0 (491.6)	(8) 1/2”, (4) 3/4”	(2) 1/2”, (2) 3/4”	25	—

See end of section (Pg A88) for detailed drawings »

Square Boxes and Covers

4” Square Boxes – Welded with Conduit KOs

181

189, 8189

189RAC

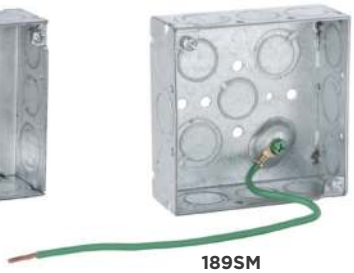

189SM

911-9

Applications

- RACO® Boxes are installed in walls or ceilings for lighting fixtures, switches or receptacles
- Square boxes are used where multiple conductor runs are split into two or more directions to bring power to a number of electrical devices

Product Features

- Combination screw heads provide for faster installation
- TKO® Knockouts allow for design and installation flexibility.
- Red boxes, covers and extensions for dedicated life safety alarm circuits

Compliance

- UL LISTED
- All RACO UL listed steel boxes are acceptable for use in 2 hr. fire rated floor-ceiling and roof-ceiling assemblies, as well as 2 hr. fire rated bearing and non-bearing wood stud and steel stud walls. For additional information consult Fire Resistance Ratings ANSI/UL 263, Sec. III-6
- **600V** Per U.L. 514-A, suitable for use without a bonding jumper in circuits up to 600 volts

4” Square Box, 1-1/2” Deep – *Welded with Conduit KOs*

Cat. #	Description	Cubic Inches (CM^3)	Knockouts		Std. Pkg.	Bar Code
			Sides Conduit	Bottom Conduit		
181	—	21.0 (344.1)	(8) 3/4”	(1) 1/2” (4) 3/4”	50	—
189	**600V**, Raised Ground	21.0 (344.1)	(8) 1/2” (4) TKO	(2) 1/2” (2) TKO	50	—
8189	**600V**, Raised Ground	21.0 (344.1)	(8) 1/2” (4) TKO	(2) 1/2” (2) TKO	50	IIIIIIII
189RAC	**600V**	21.0 (344.1)	(8) 1/2” (4) TKO	(2) 1/2” (2) TKO	50	—
189SM	**600V**, Raised Ground, 10” #12 Stranded Copper Pigtail	21.0 (344.1)	(8) 1/2” (4) TKO	(2) 1/2” (2) TKO	50	IIIIIIII
911-9	**600V**, Raised Ground, Painted Red	21.0 (344.1)	(8) 1/2” (4) TKO	(2) 1/2” (2) TKO	50	—

See end of section (Pg A88) for detailed drawings »

4” Square Bracketed Boxes – Welded with Conduit KOs

196, 8196

8197

199

208, 8208

193, 8193

189F

189H

189HWP

189M

227 BOX-LOC®

Applications

- RACO® Boxes are installed in walls or ceilings for lighting fixtures, switches or receptacles
- Square boxes are used where multiple conductor runs are split into two or more directions to bring power to a number of electrical devices

Product Features

- Reference the Box Selection section in the front of this catalog for complete description of bracket types and features
- BOX-LOC® (MS) Bracket Box is a snap to install. Place the bracket on the open side of the stud first. Slots in the bracket engage the lip of the stud and actually crimp it as you press the bracket on the stud, quickly locking it in place
- TKO® Knockouts allow for design and installation flexibility
- UBS Support - Welded to box, preset bend points to work with wall thickness 2-1/2” to 6”

Compliance

- UL LISTED
- All RACO UL listed steel boxes are acceptable for use in 2 hr. fire rated floor-ceiling and roof-ceiling assemblies, as well as 2 hr. fire rated bearing and non-bearing wood stud and steel stud walls. For additional information consult Fire Resistance Ratings ANSI/UL 263, Sec. III-6
- **600V** Per U.L. 514-A, suitable for use without a bonding jumper in circuits up to 600 volts

4” Square Bracketed Boxes, 1-1/2” Deep – *Welded with Conduit KOs*

Cat. #	Description	Cubic Inches (CM³)	Knockouts		Std. Pkg.	Bar Code
			Sides Conduit	Bottom Conduit		
196	**600V**, FS, Flush	21.0 (344.1)	(6) 1/2” (3) TKO	(3) 1/2” (2) TKO	25	—
8196	**600V**, FS, Flush	21.0 (344.1)	(6) 1/2” (3) TKO	(3) 1/2” (2) TKO	25	IIIIIIII
8197	**600V**, FH, Flush	21.0 (344.1)	(6) 1/2” (3) TKO	(3) 1/2” (2) TKO	25	IIIIIIII
199	**600V**, FS, Flush	21.0 (344.1)	(6) 3/4”	(1) 1/2” (4) 3/4”	25	—
208	W, Flush	21.0 (344.1)	(6) 1/2” (3) TKO	(3) 1/2” (2) TKO	25	—
8208	**600V**, W, Flush	21.0 (344.1)	(6) 1/2” (3) TKO	(3) 1/2” (2) TKO	25	IIIIIIII
193	**600V**, B, Flush	21.0 (344.1)	(6) 1/2” (3) TKO	(3) 1/2” (2) TKO	25	—
8193	**600V**, B, Flush	21.0 (344.1)	(6) 1/2” (3) TKO	(3) 1/2” (2) TKO	10	IIIIIIII
189F	**600V**, Raised Ground, 8” #12 Solid Copper Pigtail, UBS Farside Support	21.0 (344.1)	(8) 1/2” (4) TKO	(2) 1/2” (2) TKO	50	—
189H	**600V**, Raised Ground, 8” #12 Solid Copper Pigtail, UBS, HM	21.0 (344.1)	(6) 1/2” (3) TKO	(2) 1/2” (2) TKO	20	—
189HWP	**600V**, Raised Ground, UBS, HM	21.0 (344.1)	(6) 1/2” (3) TKO	(2) 1/2” (2) TKO	20	—
189M	**600V**, Raised Ground, 8” #12 Solid Copper Pigtail, UBS, HM	21.0 (344.1)	(4) 1/2” (2) TKO	(2) 1/2” (2) TKO	20	—
227	**600V**, MS, Flush, BOX-LOC®, Provided with Far-side support (part #978) —	21.0 (344.1)	(6) 1/2” (3) TKO	(3) 1/2” (2) TKO	25	IIIIIIII

See end of section (Pg A88) for detailed drawings »

Square Boxes and Covers

4” Square Extension Rings

201, 8201

202

203, 8203

911-6

187

207

Applications

- RACO® Extension rings provide a means for adding cubic capacity or as an outlet box for surface conduit

Product Features

- Combination screw heads provide for faster installation
- Red boxes, covers and extensions for dedicated life safety alarm circuits
- RACO® 187 can be positioned to accommodate one or two switch boxes

Compliance

- UL LISTED

4” Square Bracketed Boxes, 1-1/2” Deep – *Drawn with Conduit KOs*

Cat. #	Description	Cubic Inches (CM³)	Knockouts		Std. Pkg.	Bar Code
			Sides Conduit	Bottom Conduit		
201	—	22.5 (368.7)	(12) 1/2”	—	50	—
8201	—	22.5 (368.7)	(12) 1/2”	—	25	IIIIIIII
202	—	22.5 (368.7)	(8) 3/4”	—	50	—
203	—	22.5 (368.7)	(8) 1/2”, (4) 3/4”	—	50	—
8203	—	22.5 (368.7)	(8) 1/2”, (4) 3/4”	—	20	IIIIIIII
911-6	Painted Red	22.5 (368.7)	(8) 1/2”, (4) 3/4”	—	50	—
187	Attaches to Switch Boxes	22.5 (368.7)	(8) 1/2”, (4) 3/4”	—	25	IIIIIIII

4” Square Extension Rings, 2-1/8” Deep – *Welded with Conduit KOs*

Cat. #	Description	Cubic Inches (CM³)	Knockouts		Std. Pkg.	Bar Code
			Sides Conduit	Bottom Conduit		
207	—	30.3 (496.5)	(6) 1/2”, (6) 3/4”	—	25	—

See end of section (Pg A88) for detailed drawings »

4” Square Boxes – Welded with Conduit KOs

232, 8232

232RAC

231, 8231

233, 8233

232SLD

232SM

911-3

232CS

232-OW

Applications

- RACO® Boxes are installed in walls or ceilings for lighting fixtures, switches or receptacles
- Square boxes are used where multiple conductor runs are split into two or more directions to bring power to a number of electrical devices

Product Features

- Combination screw heads provide for faster installation
- TKO® knockouts offer greater flexibility with RACO patented combination 1/2” and 3/4” knockout
- Red boxes, covers and extensions for dedicated life safety alarm circuits

Compliance

- UL LISTED
- All RACO UL listed steel boxes are acceptable for use in 2 hr. fire rated floor-ceiling and roof-ceiling assemblies, as well as 2 hr. fire rated bearing and non-bearing wood stud and steel stud walls. For additional information consult Fire Resistance Ratings ANSI/UL 263, Sec. III-6
- **600V** Per U.L. 514-A, suitable for use without a bonding jumper in circuits up to 600 volts

4” Square Box, 2-1/8” Deep – *Welded with Conduit KOs*

Cat. #	Description	Cubic Inches (CM³)	Knockouts		Std. Pkg.	Bar Code
			Sides Conduit	Bottom Conduit		
232	**600V**, Raised Ground	30.3 (496.5)	(8) 1/2″, (4) TKO	(2) 1/2″, (2) TKO	25	—
8232	**600V**, Raised Ground	30.3 (496.5)	(8) 1/2″, (4) TKO	(2) 1/2″, (2) TKO	25	IIIIIIII
232RAC	**600V**, Assembled in the USA	30.3 (496.5)	(8) 1/2″, (4) TKO	(3) 1/2″, (2) TKO	25	—
231	**600V**, Raised Ground	30.3 (496.5)	(8) 3/4″	(1) 1/2″, (4) 3/4″	25	—
8231	**600V**, Raised Ground	30.3 (496.5)	(8) 3/4″	(1) 1/2″, (4) 3/4″	25	IIIIIIII
233	**600V**, Raised Ground	30.3 (496.5)	(8) 1″	(3) 1/2″, (2) 3/4″	25	—
8233	**600V**, Raised Ground	30.3 (496.5)	(8) 1″	(3) 1/2″, (2) 3/4″	25	IIIIIIII
232SLD	**600V**, Raised Ground 8″ #12 Solid Copper Pigtail	30.3 (496.5)	(8) 1/2″, (4) TKO	(2) 1/2″, (2) TKO	25	—
232SM	**600V**, Raised Ground, 10″ #12 Stranded Copper Pigtail	30.3 (496.5)	(8) 1/2″, (4) TKO	(2) 1/2″, (2) TKO	25	IIIIIIII
911-3	**600V**, Painted Red	30.3 (496.5)	(8) 1/2″, (4) TKO	(2) 1/2″, (2) TKO	25	IIIIIII
232CS	**600V**, Raised Ground, Elevated Side Knockouts	30.3 (496.5)	(8) 1/2″, (4) TKO	(2) 1/2″, (2) TKO	25	—
232-OW	**600V**, Raised Ground, Old Work RETRO-RING, Accepts Box Mounting of One or Two Devices	30.3 (496.5)	(8) 1/2″, (4) TKO	(2) 1/2″, (2) TKO	25	IIIIIIII

See end of section (Pg A88) for detailed drawings »

Square Boxes and Covers

4” Square Bracketed Boxes – Welded with Conduit KOs

Applications

- RACO® Boxes are installed in walls or ceilings for lighting fixtures, switches or receptacles
- Square boxes are used where multiple conductor runs are split into two or more directions to bring power to a number of electrical devices

Product Features

- Reference the Box Selection section in the front of this catalog for complete description of bracket types and features
- BOX-LOC® (MS) Bracket Box is a snap to install. Place the bracket on the open side of the stud first. Slots in the bracket engage the lip of the stud and actually crimp it as you press the bracket on the stud, quickly locking it in place
- Combination screw heads provide for faster installation
- TKO® knockouts offer greater flexibility with RACO® patented combination 1/2” and 3/4” knockout
- UBS Support - Welded to box, preset bend points to work with wall thickness 2-1/2” to 6”
- Red boxes, covers and extensions for dedicated life safety alarm circuits

Compliance

- UL LISTED
- All RACO UL listed steel boxes are acceptable for use in 2 hr. fire rated floor-ceiling and roof-ceiling assemblies, as well as 2 hr. fire rated bearing and non-bearing wood stud and steel stud walls. For additional information consult Fire Resistance Ratings ANSI/UL 263, Sec. III-6.
- **600V** Per U.L. 514-A, suitable for use without a bonding jumper in circuits up to 600 volts

See end of section (Pg A88) for detailed drawings »

236

235, 8235

251

232H

232M

232F

238 BOX-LOC®

911-4

4” Square Box, 2-1/8” Deep – *Welded with Conduit KOs*

Cat. #	Description	Cubic In. (CM^3)	Knockouts		Std. Pkg.	Bar Code
			Sides Conduit	Bottom Conduit		
236	**600V**, FM, Flush	30.3 (496.5)	(6) 3/4″	(1) 1/2″, (4) 3/4″	25	IIIIIIII
235	**600V**, TS, Flush	30.3 (496.5)	(6) 1/2″, (3) TKO	(3) 1/2″, (2) TKO	25	—
8235	TS, Flush,	30.3 (496.5)	(6) 1/2″, (3) TKO	(3) 1/2″, (2) TKO	25	IIIIIIII
251	B Flush	30.3 (496.5)	(6) 1/2″, (3) TKO	(3) 1/2″, (2) TKO	25	—
232H	Raised Ground, 8″ #12 Solid Copper Pigtail, UBS, HM	30.3 (496.5)	(8) 1/2″, (4) TKO	(2) 1/2″, (2) TKO	25	—
232M	**600V**, Raised Ground, 8″ #12 Solid Copper Pigtail, UBS, HM	30.3 (496.5)	(8) 1/2″, (4) TKO	(2) 1/2″, (2) TKO	25	—
232F	**600V**, Raised Ground 8″ #12 Solid Copper Pigtail, UBS	30.3 (496.5)	(8) 1/2″, (4) TKO	(2) 1/2″, (2) TKO	25	—
238	BOX-LOC®, MS, Flush, Provided with Far-side support (part #978)	30.3 (496.5)	(6) 1/2″, (3) TKO	(3) 1/2″, (2) TKO	25	IIIIIIII
911-4	FM Bracket, Painted Red	30.3 (496.5)	(6) 1/2″, (3) TKO	(3) 1/2″, (2) TKO	25	—

4” Square Plenum Boxes and Cover

226

231PL

239

203PL

762

165PL

722PL

257PL

258PL

259PL*

264PL

832PL

Applications

- RACO® Plenum boxes are used in above-ceiling applications where air-tight enclosures are required

Product Features

- To maintain plenum seal, RACO Plenum Boxes do not provide ground screw holes
- Cover gasket is PVC foam material
- Air-tight Knockouts

Compliance

- UL LISTED

Boxes and Covers

Cat. #	Description	Cu. In. (CM^3)	Air-Tight Knockouts		Std. Pkg.	Bar Code
			Sides Conduit	Bottom Conduit		
4” Square Plenum						
226	1-1/2″ deep box	21	(8) 1/2″, (4) 3/4″	(3) 1/2″, (2) 3/4″	50	IIIIIIII
231PL	2-1/8″ deep box	30.3	(8) 3/4″	(3) 1/2″, (2) 3/4″	25	—
239	2-1/8″ deep box	30.3	(8) 1/2″, (4) 3/4″	(3) 1/2″, (2) 3/4″	25	IIIIIIII
203PL	1-1/2″ deep extension 4″ sq. boxes	21	(8) 1/2″, (4) 3/4″	—	50	—
762	Gasketed blank cover for 4″ sq. boxes	—	—	—	50	IIIIIIII
4″ Octagon Plenum						
165PL	2-1/8″ deep box	21.5	(2) 1/2″, (2) 3/4″	(3) 1/2″, (2) 3/4″	25	—
722PL	Gasketed blank cover for 4″ octagon box	—	—	—	25	—
4-11/16″ Square Plenum						
257PL	2-1/8″ deep box	42	(8) 1/2″, (4) 3/4″	(3) 1/2″, (2) 3/4″	25	—
258PL	2-1/8″ deep box	42	(8) 1″	(3) 1/2″, (2) 3/4″	25	—
259PL*	2-1/8″ deep box	42	(4) 1″, (4) 1-1/4″	(3) 1/2″, (2) 3/4″	25	—
264PL	2-1/8″ deep box	42	(12) 3/4″	(3) 1/2″, (2) 3/4″	25	—
832PL	Gasketed blank cover for 4-11/16″ sq. box	—	—	—	25	—

*Notes: * Not UL Rated*

See end of section (Pg A88) for detailed drawings »

Square Boxes and Covers

3-3/4" Square Boxes – Welded with Conduit KOs

256

911-2

255

911-1

Applications

- RACO® Red boxes and covers allow inspector or building owner to immediately identify alarm/fire or life safety systems

Product Features

- 3-3/4" opening in wall allows for margin of error when using a 4" square cover
- Accepts all 4" square covers and mudrings
- Red boxes, covers and extensions for dedicated life safety alarm circuits

Compliance

- UL LISTED

Large Capacity Boxes

Cat. #	Description	Cubic Inches (CM^3)	Knockouts		Std. Pkg.	Bar Code
			Sides Conduit	Bottom Conduit		
3-3/4" Square Boxes, 3-1/2" Deep – *Welded with Conduit KOs*						
256	—	45.0 (737.4)	(12) 1/2"-3/4" Concentric	(4) 1/2"-3/4" Concentric	25	IIIIIIII
911-2	Painted Red	45.0 (737.4)	(12) 1/2"-3/4" Concentric	(4) 1/2"-3/4" Concentric	25	—
3-3/4" Square Bracketed Boxes, 3-1/2" Deep – *Welded with Conduit KOs*						
255	FM Bracket	45.0 (737.4)	(10) 1/2"-3/4" Concentric	(4) 1/2"-3/4" Concentric	10	IIIIIIII
911-1	FM Bracket, Painted Red	45.0 (737.4)	(10) 1/2"-3/4" Concentric	(4) 1/2"-3/4" Concentric	10	—

See end of section (Pg A88) for detailed drawings »

4” Square Boxes – Welded with Armored Cable / Metal Clad / Flex Clamps

213, 8213

213HWP

224

218, 8218

229 BOX-LOC®

Applications

- RACO® Boxes are installed in walls or ceilings for lighting fixtures, switches or receptacles
- Square boxes are used where multiple conductor runs are split into two or more directions to bring power to a number of electrical devices

Product Features

- Reference the Box Selection section in the front of this catalog for complete description of bracket types and features
- BOX-LOC® (MS) Bracket Box is a snap to install. Place the bracket on the open side of the stud first. Slots in the bracket engage the lip of the stud and actually crimp it as you press the bracket on the stud, quickly locking it in place
- UBS Support - Welded to box, preset bend points to work with wall thickness 2-1/2” to 6”
- Combination screw heads provide for faster installation
- TKO® Knockouts offer greater flexibility with RACO patented combination 1/2” and 3/4” knockout

Compliance

- UL LISTED
- All RACO UL listed steel boxes are acceptable for use in 2 hr. fire rated floor-ceiling and roof-ceiling assemblies, as well as 2 hr. fire rated bearing and non-bearing wood stud and steel stud walls. For additional information consult Fire Resistance Ratings ANSI/UL 263, Sec. III-6
- **600V** Per U.L. 514-A, suitable for use without a bonding jumper in circuits up to 600 volts

4” Square Boxes

Cat. #	Description	Cubic Inches (CM³)	Knockouts			Std. Pkg.	Bar Code
			Cable Priouts	Sides Conduit	Bottom Conduit		
1-1/2” Deep – *Welded with Armored Cable/Metal Clad/Flex Clamps*							
213	**600V**	21.0 (344.1)	4	(4) 1/2", (2) TKO	(1) 1/2"	50	—
8213	**600V**	21.0 (344.1)	4	(4) 1/2", (2) TKO	(1) 1/2"	30	IIIIIIII
Bracketed Box, 1-1/2" Deep – *Welded with Armored Cable/Metal Clad/Flex Clamps*							
213HWP	**600V**, HM, UBS	21.0 (344.1)	4	(4) 1/2", (2) TKO	(1) 1/2"	20	—
224	**600V**, B, Flush	21.0 (344.1)	4	(2) 1/2", (1) TKO	(1) 1/2"	25	—
218	**600V**, FS, Flush	21.0 (344.1)	4	(2) 1/2", (1) TKO	(1) 1/2"	25	—
8218	**600V**, FS, Flush	21.0 (344.1)	4	(2) 1/2", (1) TKO	(1) 1/2"	25	IIIIIIII
229	**600V**, BOX-LOC®, (MS) Flush, Provided with Far-side support (part #978)	21.0 (344.1)	4	(2) 1/2"	(1) 1/2"	25	IIIIIIII

See end of section (Pg A88) for detailed drawings »

4” Square boxes – Welded with Armored Cable / Metal Clad / Flex Clamps

Applications

- RACO® Boxes are installed in walls or ceilings for lighting fixtures, switches or receptacles
- Square boxes are used where multiple conductor runs are split into two or more directions to bring power to a number of electrical devices

Product Features

- Reference the Box Selection section in the front of this catalog for complete description of bracket types and features
- BOX-LOC® (MS) Bracket Box is a snap to install. Place the bracket on the open side of the stud first. Slots in the bracket engage the lip of the stud and actually crimp it as you press the bracket on the stud, quickly locking it in place
- Combination screw heads provide for faster installation
- TKO® knockouts offer greater flexibility with RACO patented combination 1/2” and 3/4” knockout

Compliance

- UL LISTED
- All RACO UL listed steel boxes are acceptable for use in 2 hr. fire rated floor-ceiling and roof-ceiling assemblies, as well as 2 hr. fire rated bearing and non-bearing wood stud and steel stud walls. For additional information consult Fire Resistance Ratings ANSI/UL 263, Sec. III-6.
- **600V** Per U.L. 514-A, suitable for use without a bonding jumper in circuits up to 600 volts

248

241, 8241

249

248HWP

243 BOX-LOC®

4” Square Boxes

Cat. #	Description	Cubic Inches (Cm3)	Knockouts			Std. Pkg.	Bar Code
			Cable Priouts	Sides Conduit	Bottom Conduit		
2-1/8” Deep – *Welded with Armored Cable/Metal Clad/Flex Clamps*							
248	**600V**	30.3 (496.5)	4	(4) 1/2", (2) TKO	(1) 1/2"	25	IIIIIIII
Bracketed Box, 2-1/8" Deep – *Welded with Armored Cable/Metal Clad/Flex Clamps*							
241	**600V**, TS, Flush	30.3 (496.5)	4	(2) 1/2", (1) TKO	(1) 1/2"	25	—
8241	**600V**, TS, Flush	30.3 (496.5)	4	(2) 1/2", (1) TKO	(1) 1/2"	25	IIIIIIII
249	**600V**, B, Flush	30.3 (496.5)	4	(2) 1/2", (1) TKO	(1) 1/2"	25	—
248HWP	**600V**, HM Bracket, UBS	30.3 (496.5)	4	(2) 1/2", (1) TKO	(1) 1/2"	25	IIIIIIII
243	**600V**, BOX-LOC®, (MS) Flush, Provided w/Far-side support (part #978)	30.3 (496.5)	4	(2) 1/2", (1) TKO	(1) 1/2"	25	IIIIIIII

See end of section (Pg A88) for detailed drawings »

4" Square Stab-IT® Boxes – Welded with Armored Cable / Metal Clad / Flex Clamps

232S

232MS

232SCM

232MSCM

NEW

232MSHF

NEW

232MSCMHF

244S

244SCM

244MS

NEW

244MSHF

244MSCM

NEW

244MSCMHF

248S

248HS

248MS

NEW

248MSHF

Applications

- For any job where flexible armored cable is being used.

Product Features

- Designed for quick installation of flex, MC, MCI, MCI-A, AC, and HCF Cable. Refer to Stab-IT chart on page A-7
- Accepts cable sizes from 14/2 up to 10/3 for most cable types
- Each Stab-IT connector accommodates two cables
- Pre-installed 8" solid #12 pigtail for faster installation

Compliance

- UL LISTED
- All RACO UL listed steel boxes are acceptable for use in 2 hr. fire rated floor-ceiling and roof-ceiling assemblies, as well as 2 hr. fire rated bearing and non-bearing wood stud and steel stud walls. For additional information consult Fire Resistance Ratings ANSI/UL 263, Sec. III-6

4" Square Stab-IT Box, 2-1/8" Deep – *Welded with Armored Cable/Metal Clad/Flex Clamps*

Cat. #	Description	Cu. In. (CM3)	Cable Priouts	Knockouts		Std. Pkg.
				Sides Conduit	Bottom Conduit	
232S*	(1) Stab-IT Connector, w/ Pigtail	30.3 (496.5)	2	(6) 1/2", (3) 1/2"-3/4" TKO	(1) 1/2", (1) 1/2"-3/4" TKO	25
232MS	(1) Stab-IT Connector, M Brkts., w/ Pigtail & UBS			(6) 1/2", (3) 1/2"-3/4" TKO	(1) 1/2", (1) 1/2"-3/4" TKO	25
232SCM*	(1) Stab-IT Connector, w/Pigtail, Cable Mgmt. Clip			(6) 1/2", (3) 1/2"-3/4" TKO	(1) 1/2", (1) 1/2"-3/4" TKO	25
232MSCM	(1) Stab-IT Connector, M Brkts., w/Pigtail, Cable Mgmt. Clip & UBS			(6) 1/2", (3) 1/2"-3/4" TKO	(1) 1/2", (1) 1/2"-3/4" TKO	25
232MSHF	(1) Stab-IT Connector, M Brkts., w/Pigtail & heavy duty UBS			(6) 1/2", (3) 1/2"-3/4" TKO	(1) 1/2", (1) 1/2"-3/4" TKO	25
232MSCMHF	(1) Stab-IT Connector, M Brkts., w/Pigtail, Cable Mgmt. Clip & heavy duty UBS			(6) 1/2", (3) 1/2"-3/4" TKO	(1) 1/2", (1) 1/2"-3/4" TKO	25
244S	(2) Stab-IT Connectors on top, w/Pigtail		4	(6) 1/2", (3) 1/2"-3/4" TKO	(1) 1/2", (1) 1/2"-3/4" TKO	25
244SCM	(2) Stab-IT Connectors on top, w/Pigtail & Cable Mgmt. Clips			(6) 1/2", (3) 1/2"-3/4" TKO	(1) 1/2", (1) 1/2"-3/4" TKO	25
244MS	(2) Stab-IT Connectors, Connectors on top, M Brkts., w/Pigtail			(6) 1/2", (3) 1/2"-3/4" TKO	(1) 1/2", (1) 1/2"-3/4" TKO	25
244MSHF	(2) Stab-IT Connectors on top, M brkts., w/Pigtail, & heavy duty UBS			(6) 1/2", (3) 1/2"-3/4" TKO	(1) 1/2", (1) 1/2"-3/4" TKO	25
244MSCM	(2) Stab-IT Connectors on top, M Brkts., w/Pigtail & UBS			(6) 1/2", (3) 1/2"-3/4" TKO	(1) 1/2", (1) 1/2"-3/4" TKO	25
244MSCMHF	(2) Stab-IT Connectors on top, H Brkt., w/Pigtail, Cable Mgmt. Clips & heavy duty UBS			(6) 1/2", (3) 1/2"-3/4" TKO	(1) 1/2", (1) 1/2"-3/4" TKO	25
248S	(2) Stab-IT Connectors, w/ Pigtail			(4) 1/2", (1) 1/2"-3/4" TKO	(1) 1/2"	25
248HS	(2) Stab-IT Connectors, H Brkt., w/Pigtail & UBS			(4) 1/2", (1) 1/2"-3/4" TKO	(1) 1/2"	25
248MSHF	(2) Stab-IT Connectors, M Brkts., w/ Pigtail & heavy duty UBS			(4) 1/2", (1) 1/2"-3/4" TKO	(1) 1/2"	25
248MS	(2) Stab-IT Connectors, M Brkts., w/ Pigtail			(4) 1/2", (1) 1/2"-3/4" TKO	(1) 1/2"	25

*Notes: * cULus Listed. All other models are UL Listed. For information on UBS and heavy duty UBS see page A30.*

See end of section (Pg A88) for detailed drawings »

FW Box Assemblies

PRO Ready 4″ Stab-IT® Box Assemblies

Save time and effort!

FW1.1

FW1.7

FW1.9

FW4.1

FW4.7

FW4.9

Save time and labor on any job with RACO ProReady™ box assemblies. Components are pre-assembled, ready to install right out of the box. Ensure quality while reducing material and labor cost, even jobsite waste.

Applications

- For any project where flexible armored cable is being used and the electrical needs are repeated throughout the building.

Features

- All components preassembled, ready to install
- Open Center Brackets pre-set for either 16” or 24” studs

STAB-IT 4″ Boxes

- STAB-IT connector holds 2 cables
- Built-in cable management clips provide first means of support
- Model ending in HF feature a Heavy Duty Universal Box Support

Adjustable Mud Rings & Hinged Adjustable Mud Rings

- 1/2” to 1-3/8” adjustability range
- All screws inside the ring to eliminate damage from router
- Adjustment screws visible and accessible after the device is installed
- Hinged design allows easy and quick access to install wiring
- For use on wood or metal studs
- UL LISTED

4″ Square Box/Pre-Fab Assemblies

Catalog #	Description	Cu. In. Capacity	Ctn. Qty.
FW1.1	232MSCMHF + 773 / 1G - Mud Ring, Raised 3/4″ / M Bracket	30.3	12
FW1.7	232MSCMHF + 768HAMR/1G Hinged Adjustable Mud Ring/M Bracket	30.3	12
FW1.9	232MSCMHF + 768AMR / 1G -Adjustable Mud Ring / M Bracket	30.3	12
FW4.1	232MSCMHF + 779 / 2G - Mud Ring, Raised 3/4″ / M Bracket	30.3	12
FW4.7	232MSCMHF + 768HAMR/2G Hinged Adjustable Mud Ring/M Bracket	30.3	12
FW4.9	232MSCMHF + 769AMR / 2G - Adjustable Mud Ring / M Bracket	30.3	12

FW Box Assemblies

FW2.1.16

FW2.7.16

FW2.9.16

FW5.1.16

FW5.7.16

FW5.9.16

FW3.1.16

FW3.7.16

FW3.9.16

FW6.1.16

FW6.7.16

FW6.9.16

FW2.1.24

FW2.7.24

FW2.9.24

FW5.1.24

FW5.7.24

FW5.9.24

FW3.1.24

FW3.7.24

FW3.9.24

FW6.1.24

FW6.7.24

FW6.9.24

4″ Square Box/Pre-Fab Assemblies

Catalog No.	Description	Cu. In. Capacity	Ctn. Qty.
FW2.1.16	9020R + 232SCM + 773 / 1G - Mud Ring, Raised 3/4″ / 16″ Studs	30.3	6
FW2.7.16	9020R + 232SCM + 768HAMR/1G Hinged Adjustable Mud Ring/16″ Studs	30.3	6
FW2.9.16	9020R + 232SCM + 768AMR / 1G - Adjustable Mud Ring / 16″ Studs	30.3	6
FW3.7.16	9020R + 232SCM + 231 + (2) 768HAMR/1G Hinged Adjustable Mud Ring/16″ Studs	30.3 + 30.3	6
FW5.1.16	9020R + 232SCM + 779 / 2G - Mud Ring, Raised 3/4″ / 16″ Studs	30.3	6
FW5.7.16	9020R + 232SCM + 768HAMR/2G Hinged Adjustable Mud Ring/16″ Studs	30.3	6
FW5.9.16	9020R + 232SCM + 769AMR / 2G - Adjustable Mud Ring / 16″ Studs	30.3	6
FW3.1.16	9020R + 232SCM + 231 + (2) 773 / 1G - Mud Ring, Raised 3/4″ / 16″ Studs	30.3	6
FW3.9.16	9020R + 232SCM + 231 + (2) 768AMR / 1G - Adjustable Mud Ring / 16″ Studs	30.3 + 30.3	6
FW6.1.16	9020R + (232SCM + 779) / 2G - Mud Ring, Raised 3/4″ + (231 + 773) / 1G - Mud Ring, Raised 3/4″ / 16″ Studs	30.3 + 30.3	6
FW6.7.16	9020R + (232SCM + 768HAMR) 2G Hinged Adjustable Mud Ring + (231 + 769HAMR), 1G Hinged Adjustable Mud Ring/16″ Studs	30.3 + 30.3	6
FW6.9.16	9020R + (232SCM + 869AMR) / 2G - Adj. Mud Ring + (231 + 768AMR) / 1G - Adj. Mud Ring / 16″ Studs	30.3 + 30.3	6
FW2.1.24	9020R + 232SCM + 773 / 1G - Mud Ring, Raised 3/4″ / 24″ Studs	30.3	6
FW2.7.24	9020R + 232SCM + 768HAMR 1G Hinged Adjustable Mud Ring/24″ Studs	30.3	6
FW2.9.24	9020R + 232SCM + 768AMR / 1G - Adjustable Mud Ring / 24″ Studs	30.3	6
AW3.7.24	9020R + 232SCM + 231 + (2) 768HAMR/1G Hinged Adjustable Mud Ring/24″ Studs	30.3 + 30.3	6
FW5.1.24	9020R + 232SCM + 779 / 2G - Mud Ring, Raised 3/4″ / 24″ Studs	30.3	6
FW5.7.24	9020R + 232SCM+ 769HAMR/2G Hinged Adjustable Mud Ring/24″ Studs	30.3	6
FW5.9.24	9020R + 232SCM + 769AMR /2G - Adjustable Mud Ring / 24″ Studs	30.3	6
FW3.1.24	9020R + 232SCM + 231 + (2) 773 / 1G - Mud Ring, Raised 3/4″ / 24″ Studs	30.3 + 30.3	6
FW3.9.24	9020R + 232SCM + 231 + (2) 768AMR / 1G - Adj. Mud Ring / 24″ Studs	30.3 + 30.3	6
FW6.1.24	9020R + (232SCM + 779) / 2G - Mud Ring, Raised 3/4″ + (231 + 773) / 1G - Mud Ring, Raised 3/4″ / 24″ Studs	30.3	6
FW6.7.24	9020R + (232SCM + 768HAMR) 2G Hinged Adjustable Mud Ring + (231 + 769HAMR), 1G Hinged Adjustable Mud Ring/24″ Studs	30.3 + 30.3	6
FW6.9.24	9020R + (232SCM + 769AMR) / 2G - Adj. Mud Ring + (231 + 768AMR) / 1G - Adj. Mud Ring / 24″ Studs	30.3	6

4” Square Boxes – Welded with Non-Metallic Sheathed Cable Clamps

211, 8211

223

225

242

240, 8240

Applications

- RACO® Boxes are installed in walls or ceilings for lighting fixtures, switches or receptacles
- Square boxes are used where multiple conductor runs are split into two or more directions to bring power to a number of electrical devices

Product Features

- Reference the Box Selection section in the front of this catalog for complete description of bracket types and features
- BOX-LOC® (MS) Bracket Box is a snap to install. Place the bracket on the open side of the stud first. Slots in the bracket engage the lip of the stud and actually crimp it as you press the bracket on the stud, quickly locking it in place
- Combination screw heads provide for faster installation
- TKO® knockouts offer greater flexibility with RACO patented combination 1/2” and 3/4” knockout

Compliance

- UL LISTED
- All RACO UL listed steel boxes are acceptable for use in 2 hr. fire rated floor-ceiling and roof-ceiling assemblies, as well as 2 hr. fire rated bearing and non-bearing wood stud and steel stud walls. For additional information consult Fire Resistance Ratings ANSI/UL 263, Sec. III-6.
- **600V** Per U.L. 514-A, suitable for use without a bonding jumper in circuits up to 600 volts

4” Square Boxes

Cat. #	Description	Cubic Inches (CM³)	Knockouts			Std. Pkg.	Bar Code
			Cable Priouts	Sides Conduit	Bottom Conduit		
1-1/2” Deep – *Welded with Non-Metallic Sheathed Cable Clamps*							
211	**600V**	21.0 (344.1)	4	(4) 1/2”, (2) TKO	(1) 1/2”	50	—
8211	**600V**	21.0 (344.1)	4	(4) 1/2”, (2) TKO	(1) 1/2”	50	IIIIIIII
223	**600V**, FS, Flush	21.0 (344.1)	4	(2) 1/2”, (1) TKO	(1) 1/2”	25	IIIIIIII
225	**600V**, B, Flush	21.0 (344.1)	4	(2) 1/2”, (1) TKO	(1) 1/2”	25	—
2-1/8” Deep – *Welded with Non-Metallic Sheathed Cable Clamps*							
242	**600V**	30.3 (496.5)	4	(4) 1/2”, (2) TKO	(1) 1/2”	25	—
240	**600V**, TS, Flush	30.3 (496.5)	4	(2) 1/2”, (1) TKO	(1) 1/2”	25	—
8240	**600V**, TS, Flush	30.3 (496.5)	4	(2) 1/2”, (1) TKO	(1) 1/2”	25	IIIIIIII

See end of section (Pg A88) for detailed drawings »

4” Square Covers

752, 8752

753, 8753

754

911-8

787

774, 775, 8775
782

771, 8771, 772, 8772
773, 8773, 768, 8768

785, 786

Applications

- RACO® covers are used to close an outlet box
- Raised device covers are used for mounting switches or receptacles

Product Features

- Angled mounting slots compensate up to 12° for box misalignment
- Red boxes, covers and extensions for dedicated life safety alarm circuits

Compliance

- c UL us LISTED

4” Square Covers

Catalog #	Description	Cubic Inches (CM³)	Std. Pkg.	Bar Code
Flat Covers				
752	Flat, Blank	—	50	—
8752	Flat, Blank	—	50	IIIIIIII
753	Flat, 1/2″ KO in Center	—	50	—
8753	Flat, 1/2″ KO in Center	—	50	IIIIIIII
754	Flat, 3/4″ KO in Center	—	50	—
911-8	Flat, Blank, Painted Red	—	50	IIIIIIII
Single Device Covers				
787	Flat	—	25	IIIIIIII
771	Raised 1/4″	1.5 (24.6)	100	—
8771	Raised 1/4″	1.5 (24.6)	10	IIIIIIII
782	Raised 1/2″ Tile	3.5 (57.3)	25	IIIIIIII
772	Raised 1/2″ Drawn	3.5 (57.3)	100	—
8772	Raised 1/2″ Drawn	3.5 (57.3)	50	IIIIIIII
768	Raised 5/8″	4.5 (73.7)	50	—
8768	Raised 5/8″	4.5 (73.7)	25	IIIIIIII
773	Raised 3/4″	5.5 (90.1)	50	—
8773	Raised 3/4″	5.5 (90.1)	24	IIIIIIII
774	Raised 1″	7.5 (122.9)	25	IIIIIIII
775	Raised 1-1/4″	9.5 (115.6)	25	—
8775	Raised 1-1/4″	9.5 (115.6)	25	IIIIIIII
785	Raised 1-1/2″	11.3 (185.2)	25	—
786	Raised 2″	14.5 (237.6)	25	—

Square Boxes and Covers

4” Square Covers

791

777, 8777-0

778, 8778

769, 8769

779, 8779

780

781, 8781

795, 796

Applications

- Raised device covers are used for mounting switches or receptacles
- Low voltage partitions may be added to conduit-type boxes to divide power from voice/data

Product Features

- Angled mounting slots compensate up to 12° for box misalignment

Compliance

- c UL US LISTED

4” Square Two Device and Tile Covers

Catalog #	Description	Cubic Inches (CM^3)	Std. Pkg.	Bar Code
791	Flat	—	25	IIIIIIII
777	Raised, 1/4″, Drawn	3.0 (49.2)	50	—
8777-0	Raised, 1/4″, Drawn	3.0 (49.2)	10	IIIIIIII
778	Raised, 1/2″, Drawn	5.5 (90.1)	50	—
8778	Raised, 1/2″, Drawn	5.5 (90.1)	25	IIIIIIII
769	Raised, 5/8″, Drawn	7.3 (119.6)	50	—
8769	Raised, 5/8″, Drawn	7.3 (119.6)	25	IIIIIIII
779	Raised, 3/4″, Drawn	8.8 (144.2)	50	—
8779	Raised, 3/4″, Drawn	8.8 (144.2)	25	IIIIIIII
780	Raised, 1″, Drawn	12.0 (196.6)	25	IIIIIIII
781	Raised, 1-1/4″, Drawn	15.0 (245.8)	25	—
8781	Raised, 1-1/4″, Drawn	15.0 (245.8)	25	IIIIIIII
795	Raised, 1-1/2″, Welded	15.5 (253.9)	25	—
796	Raised, 2″, Welded	20.5 (335.9)	25	—

Stud Mount Mud Rings

768B

773B

769B

Applications

- RACO Stud-Mount Mud Rings provide secure support for 4" square boxes and feature a built-in mud ring.

Product Features

- Rigid bracket design eliminates the need for far-side support
- Ability to eliminate electrical boxes in low-voltage installations
- Can be installed from both sides of steel studs
- Positive posting tabs ensure consistent alignment on stud
- Center window for accurate positioning
- Works with all box depths and stud sizes with no adjustment required
- Mounts quickly and easily to face of stud

Compliance

- UL LISTED

4" Stud Mount Mud Rings

Catalog #	Description	Wt. Lbs. Per 100	Cubic Inches	Std. Pkg.	Bar Code
768B	One Device Raised 5/8"	44	4.5	25	IIIIIIII
773B	One Device Raised 3/4"	47	5.5	25	IIIIIIII
769B	Two Device Raised 5/8"	40	7.3	20	IIIIIIII

Square Boxes and Covers

Hinged Mud Rings

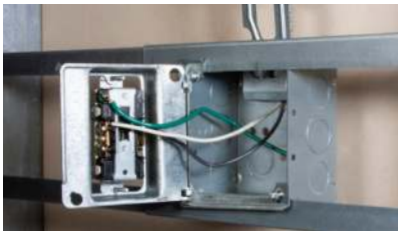

772H

768H

773H

778H

769H

779H

Applications

- Perfect for boxes mounted behind drywall or ceramic tile in commercial or residential applications

Product Features

- Unique design allows for mud ring to be opened in the field
- Hinged design allows for easy and quick access to install conduit connectors and wiring
- Accepts all standard devices
- 2-gang versions accept low voltage partitions

Compliance

- UL LISTED

Hinged Mud Rings for 4” Square Boxes

Catalog #	Description	Std. Pkg.	Bar Code
772H	1-Gang Hinged Mud Ring 1/2″ Raised	25	IIIIIIII
768H	1-Gang Hinged Mud Ring 5/8″ Raised	25	IIIIIIII
773H	1-Gang Hinged Mud Ring 3/4″ Raised	25	IIIIIIII
778H	2-Gang Hinged Mud Ring 1/2″ Raised	25	IIIIIIII
769H	2-Gang Hinged Mud Ring 5/8″ Raised	25	IIIIIIII
779H	2-Gang Hinged Mud Ring 3/4″ Raised	25	IIIIIIII

Adjustable Mud Rings

768AMR, 8768AMR

769AMR, 8769AMR

822AMR

756AMR

Applications

- Maintain code-compliant installations in hospitals, health care and multi-family applications. Great for use with ceramic tile

Product Features

- 1/2" to 1-3/8" adjustability range
- Depth adjusted by 2 screws located on opposite sides
- Adjustment screws are clearly visible and accessible even after device is installed
- All screws are inside of ring eliminating damage from router
- Design allows 2-gang cover to be installed without removing box screws
- For use with 2-1/8" deep boxes only

Compliance

- c UL US LISTED

Adjustable Mud Rings

Catalog #	Description	Std. Pkg.	Bar Code
768AMR	1-Gang Adjustable Mud Ring For 4" Sq. Boxes	25	—
8768AMR	1-Gang Adjustable Mud Ring For 4" Sq. Boxes	10	IIIIIIII
769AMR	2-Gang Adjustable Mud Ring For 4" Sq. Boxes	25	—
8769AMR	2-Gang Adjustable Mud Ring For 4" Sq. Boxes	10	IIIIIIII
822AMR	3-Gang Adjustable Round Mud Ring For 942 Box	10	—
756AMR	Adjustable Round Mud Ring For 4" Sq. Boxes	25	—

Square Boxes and Covers

Hinged Adjustable Mud Rings

768HAMR

769HAMR

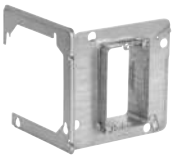

843HAMR

818HAMR

Applications

- Maintain code-compliant installations in hospitals, health care and multi-family applications. Perfect for boxes mounted behind drywall or ceramic tile.

Product Features

- 1/2” to 1-3/8” adjustability range
- Available for 4” square and 4-11/16” square boxes
- 1-Gang and 2-Gang versions
- Hinged design allows easy and quick access to install conduit connectors and wiring
- Adjustment screws are clearly visible and accessible even after device is installed
- Unique design allows for mud ring to be opened in the field
- Design allows 2-gang cover to be installed without removing box screws
- For use with 2-1/8” deep boxes

Compliance

- UL LISTED

Hinged Adjustable Mud Rings

Catalog #	Description	Std. Pkg.	Bar Code
For 4” Square Boxes			
768HAMR	1-Gang Hinged Adjustable Mud Ring	25	—
769HAMR	2-Gang Hinged Adjustable Mud Ring	25	—
For 4-11/16" Square Boxes			
843HAMR	1-Gang Hinged Adjustable Mud Ring	25	—
818HAMR	2-Gang Hinged Adjustable Mud Ring	25	—

Notes: Saves time and improves productivity.

Universal Stud Mount Brackets

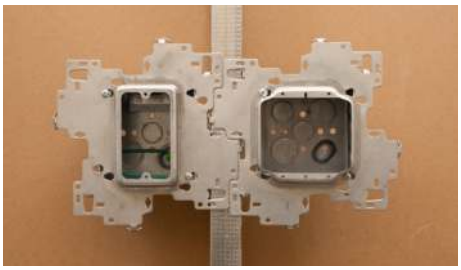

USMB

USMB134

USMB158

USMB234

USMB258

USMB1A

USMB2A

Applications

- RACO Universal Stud Mount Brackets provide secure support for 4” and 4-11/16” square boxes on metal studs.

Product Features

- Snap to metal stud or to an open center bracket* makes installation hands free, saving time and increasing productivity
- Rigid bracket design eliminates the need for far-side support
- Ability to eliminate electrical boxes in low-voltage installations
- Can be mounted vertically or horizontally
- Mounts to either side of the stud and can be mounted side by side on the same stud
- Positive Posting Tabs ensure consistent alignment on stud
- Center window for accurate positioning
- Works with all box depths and stud sizes with no adjustment required
- Universal Stud Mount Bracket works with any mud ring

Compliance

- c UL us LISTED

Universal Stud Mount Brackets

Catalog #	Description	Carton Unit Qty.	Carton Dimensions H x W x D (in.)	Carton I2of5
USMB	Universal Stud Mount Bracket	20	7.500 x 8.375 x 8.375	50050169985569
USMB134	Universal Stud Mount Bracket Single Device 3/4” Raised Mud Ring	20	8.500 x 8.250 x 12.375	50050169985576
USMB158	Universal Stud Mount Bracket Single Device 5/8” Raised Mud Ring	20	7.375 x 8.250 x 12.375	50050169985583
USMB234	Universal Stud Mount Bracket Two Device 3/4” Raised Mud Ring	20	8.500 x 8.250 x 12.375	50050169985590
USMB258	Universal Stud Mount Bracket Two Device 5/8” Raised Mud Ring	20	7.375 x 8.250 x 12.375	50050169985606
USMB1A	Universal Stud Mount Bracket Single Device Adjustable Mud Ring	20	8.875 x 9.750 x 14.000	50050169985620
USMB2A	Universal Stud Mount Bracket Two Device Adjustable Mud Ring	20	8.875 x 12.250 x 14.813	50050169985637

Notes: Works with open center bracket item 9030G.

Ultimate G Series Mounting Brackets

9030GP

232GSCM

252GSCM

768HAMRGH

768HAMRG

769HAMRG

9030G

995

Maximize your flexibility and productivity with the Ultimate G series brackets from RACO. The gangable design saves time and effort on the jobsite, allowing for hands-free installation. Snap on to any stud or to the new open center bracket. Ideal for prefab applications.

Applications

- Ideal for prefab applications, the Ultimate G series brackets work with both 4″ boxes and mud rings or 4-11/16″ boxes and mud rings, mount to studs or open center bracket.

Product Features

- Snap to stud or open center bracket for hands-free installation
- Save time and increase productivity
- For low-voltage installations the bracket can be used without electrical boxes
- Mounts to either side of the stud
- Gangable, making it easy to add boxes on either side
- Positive posting tabs ensure consistent alignment on the stud
- Center window for accurate positioning
- Works with all box depths and stud sizes with no adjustment required
- Available with integrated Hinged Adjustable Mud Rings
- 232GSCM and 252GSCM feature our STAB-iT® boxes with cable management

Ultimate G Series Mounting Brackets

Catalog #	Description	Carton Unit Qty.	Carton Dimensions H x W x D (in.)	Carton I2of5
9030GP	Ultimate G series mounting bracket	25	9.740 x 6.500 x 9.000 x 13.250	50050169985491
232GSCM	Ultimate G series mounting bracket with 4 In STAB-iT box	12	16.320 x 8.000 x 13.000 x 13.750	50050169985507
252GSCM	Ultimate G series mounting bracket 4-11/16 STAB-iT II box	12	19.900 x 8.000 x 13.000 x15.125	50050169985514
768HAMRGH	Ultimate G series mounting bracket single device horizontal with HAMR	20	21.200 x 7.500 x 13.000 x 16x000	50050169985521
768HAMRG	Ultimate G series mounting bracket single device with HAMR	20	21.200 x 7.500 x 13.000 x 16x000	50050169985538
769HAMRG	Ultimate G series mounting bracket two device with HAMR	20	21.200 x 7.500 x 13.000 x 16x000	50050169985545
9030G	Open center bracket for G & S series	25	21.200 x 7.500 x 13.000 x 16x000	50050169985484
995	Box support bracket - Ultimate G series	50	21.200 x 7.500 x 13.000 x 16x000	50050169985552

4” Square Partitions

Applications

- Low voltage partitions may be added to conduit-type boxes to divide power from voice/data
- Must be used with raised covers

Product Features

- Partition divides 4” square boxes into two compartments
- Use with two-device covers which have a slot for the partition
- Partition is scored so it can be broken at the proper depth of box and cover combination
- Helpful hint: Assemble the box with the partition in place before breaking off at the scored tab. This will prevent you from breaking off more tab than needed

706RAC

707RAC

709

Low Voltage Partitions

Cat. #	Description	Std. Pkg.	Bar Code
For 1-1/2” Depth Boxes and 2-Device Covers			
706RAC	Fits 1/4″ to 1″ Cover Depth (#777, 8777-0, 778, 769, 8769, 8778, 779, 8779, 780)	25	—
For 2-1/8″ Depth Boxes and 2-Device Covers*			
707RAC	Fits 1/4″ to 1″ Cover Depth (#777, 8777-0, 778, 769, 8769, 8778, 779, 8779, 780)	25	—
709	Fits 1-1/4″, 1-1/2″ or 2″ Cover Depth (#781, 8781, 795, 796)	25	—

Notes: Boxes, covers, and partitions must be ordered separately.
For 5/8″ cover depth, use the 3/4″ break.
Partitions are usable but not UL listed for 4-11/16” sq. box.

4” Square Fixture Covers

Applications

- Raised fixture covers are used where fixtures will be installed

Product Features

- Angled mounting slots compensate up to 12° for box misalignment
- Swivel covers restricted to 20° swing from vertical
- KWIK-HANG® 897KH allows easy installation of high bay lighting fixtures. Fixture rests in position while wiring is completed

Compliance

- c UL US LISTED

756-759, 767, 8756, 8767

897KH

4” Square Covers

Cat. #	Description	Cubic Inches (Cm3)	Recommended Max. Loads: Ceiling Fan (Dynamic) Lbs.	Recommended Max. Loads: Fixture (Static) Lbs.	Std. Pkg.	Bar Code
Fixture Covers						
767	Raised, 1/2″ Open, Ears 2-3/4″ O.C.	3.0 (49.2)	No	50	25	—
8767	Raised, 1/2″ Open, Ears 2-3/4″ O.C.	3.0 (49.2)	No	50	25	IIIIIIII
756	Raised, 5/8″ Open, Ears 2-3/4″ O.C.	4.0 (65.5)	No	50	100	—
8756	Raised, 5/8″ Open, Ears 2-3/4″ O.C.	4.0 (65.5)	No	50	25	IIIIIIII
759	Raised, 3/4″ Open, Ears 2-3/4″ O.C.	5.0 (81.9)	No	50	25	IIIIIIII
757	Raised, 1″ Open, Ears 2-3/4″ O.C.	6.8 (111.4)	No	50	25	IIIIIIII
758	Raised, 1-1/4″ Open, Ears 2-3/4″ O.C.	8.5 (139.3)	No	50	25	—
Swivel Fixture Covers						
897KH	KWIK-HANG® for 4″ Sq. Boxes, 1/2″ or 3/4″ Pipe	—	No	50	25	IIIIIIII

Square Boxes and Covers

4” Square Exposed Work Covers

800C

801C

803C

804C

805C

806C

807C

808C

808U

809C

809U

810C

811C

811U

812C

813C

814C

831C

902C

906C

907C

915C

Applications

- RACO® surface covers are used to support switches or receptacles in areas where the box is surface mounted or positioned in exposed work applications

Product Features

- Exposed work covers include screws and nuts where required
- RACO® Exposed work covers meet the requirements of the 2020 NEC Article 250.146 (A). No bonding jumper is required for covers with:
  1. Crushed corners
  2. Two or more device attachment fasteners that are permanent with thread-locking, screws, or nut-locking means
  3. Insulating retaining washer removed for at least one device attachment screw

Compliance

- c UL US LISTED

4” Square Exposed Work Covers

Catalog #	Description	Cubic In. (CM³)	Std. Pkg.	Bar Code
Crushed Corner Covers – *Raised 1/2”*				
800C	1 Toggle Switch	6.5 (106.5)	10	IIIIIIII
801C	1 Receptacle 1.406″ Dia.	6.5 (106.5)	10	IIIIIIII
803C	2 Toggle Switches	6.5 (106.5)	10	IIIIIIII
804C	Blank, No Holes	6.5 (106.5)	10	IIIIIIII
805C	1 Toggle Switch and 1 Receptacle 1.406″ Dia.	6.5 (106.5)	10	IIIIIIII
806C	1 Duplex and 1 Receptacle 1.406″ Dia.	6.5 (106.5)	10	IIIIIIII
807C	2 Receptacles 1.406″ Dia.	6.5 (106.5)	10	IIIIIIII
808C	1 GFCI	6.5 (106.5)	10	IIIIIIII
809C	2 GFCI	6.5 (106.5)	10	IIIIIIII
810C	30A-50A Receptacle 2.141″ Dia.	6.5 (106.5)	10	IIIIIIII
811C	30A Locking 1.719″ Dia.	6.5 (106.5)	10	IIIIIIII
812C	20A Receptacle 1.620″ Dia.	6.5 (106.5)	10	IIIIIIII
813C	30-60A Receptacle 2.625″ Dia.	6.5 (106.5)	10	IIIIIIII
814C	1 GFCI and 1 Toggle Switch	6.5 (106.5)	10	IIIIIIII
831C	1 Duplex, 1 20A, 1.620″ Dia.	6.5 (106.5)	10	IIIIIIII
902C	1 Duplex Receptacle	6.5 (106.5)	10	IIIIIIII
906C	1 Duplex Receptacle and 1 Toggle Switch	6.5 (106.5)	10	IIIIIIII
907C	2 Duplex Receptacles	6.5 (106.5)	10	IIIIIIII
915C	1 GFCI and 1 Duplex Receptacle	6.5 (106.5)	10	IIIIIIII
Universal Crushed Corner Covers – *Raised 1/2”, Insert Plates*				
808U	Universal for 1 Device: 1 GFCI, 1 Duplex, 1 Toggle	6.5 (106.5)	10	IIIIIIII
809U	Universal for 2 Devices: 2 GFCI, 2 Duplex or 2 Toggle	6.5 (106.5)	10	IIIIIIII
811U	Universal for 1 Round Device: 1.405″ Dia. Hole, 1.620″ Dia. Hole, 1.709″ Dia. Hole	6.5 (106.5)	10	IIIIIIII

4-11/16” Square Boxes and Extension Rings – Drawn with Conduit KOs

245

246

247

250

262

Applications

- RACO® 4-11/16” Boxes are used for a wide variety of industrial applications where larger sized conductors or wiring devices are needed and more volume is required
- Drawn boxes are ideal for exposed work applications (surface mounted wiring)
- RACO® Extension rings provide a means for adding cubic inch capacity or as an outlet box for surface conduit

Product Features

- Combination screw heads provide for faster installation

Compliance

- UL LISTED

4-11/16” Square Boxes, 1-1/2” Deep – *Drawn with Conduit KOs*

Cat. #	Description	Cubic Inches (CM³)	Knockouts		Std. Pkg.	Bar Code
			Sides Conduit	Bottom Conduit		
245	—	29.5 (483.4)	(12) 1/2″	(3) 1/2″, (2) 3/4″	25	—
246	—	29.5 (483.4)	(10) 3/4″	(3) 1/2″, (2) 3/4″	25	—
247	—	29.5 (483.4)	(8) 1/2″, (4) 3/4″	(3) 1/2″, (2) 3/4″	25	—

4-11/16″ Square Extension Rings – *Drawn with Conduit KOs*

Cat. #	Description	Cubic Inches (CM³)	Knockouts		Std. Pkg.	Bar Code
			Sides Conduit	Bottom Conduit		
250	1-1/2″ Depth	29.5 (483.4)	(8) 1/2″, (4) 3/4″	—	25	—
262	2-1/8″ Depth	43.0 (704.6)	(8) 1/2″, (4) 3/4″	—	25	IIIIIIII

See end of section (Pg A79) for detailed drawings »

Stab-IT II - 4-11/16" Square Boxes

Applications

- For any job where flexible armored cable is being used
- Ideal for pre-fab

Product Features

- Accepts larger cable, including PC-PCS luminaire cables for smart building applications
- 3 times faster than traditional connectors
- Each Stab-IT connector accommodates three cables
- Available with built-in cable management clip, offering first means of support
- Available with "M" brackets for stud mounting
- Pre-installed 8" solid #12 pigtail for faster
- Suitable for use without a bonding jumper in circuits up to 600 volts
- Improved design allows each cable to easily be removed, allows connector to be reused

Compliance

- cULus LISTED

252S

252SCM

252MS

252MSCM

252MSCMHF

252MSHF

254S

254SCM

4-11/16" Square Stab-IT® Box, 2-1/8" Deep – *Welded with Armored Cable/Metal Clad/Flex Clamps*

Cat. #	Description	Cubic Inches (CM^3)	Knockouts			Std. Pkg.	Bar Code
			Cable Priouts	Sides Conduit	Bottom Conduit		
252S*	(1) Stab-IT II Connector, w/Pigtail	42.0 (688.3)	3	(9) 1/2"-3/4", (1) 3/4"-1" TKO	(1) 1/2", (1) 1/2"-3/4" TKO	25	–
252SCM*	(1) Stab-IT II Connector, w/Pigtail, & Cable Mgmt. Clip			(9) 1/2"-3/4", (1) 3/4"-1" TKO	(1) 1/2", (1) 1/2"-3/4" TKO	25	–
252MS*	(1) Stab-IT II Connector, M brkts., w/Pigtail & UBS			(9) 1/2"-3/4", (1) 3/4"-1" TKO	(1) 1/2", (1) 1/2"-3/4" TKO	25	–
252MSCM*	(1) Stab-IT II Connector, M brkts., w/Pigtail, Cable Mgmt. Clip & UBS			(9) 1/2"-3/4", (1) 3/4"-1" TKO	(1) 1/2", (1) 1/2"-3/4" TKO	25	–
252MSCMHF	(1) Stab-IT II Connector, M brkts., w/Pigtail, Cable Mgmt. Clip & heavy duty UBS			(9) 1/2"-3/4", (1) 3/4"-1" TKO	(1) 1/2", (1) 1/2"-3/4" TKO	25	–
252MSHF	(1) Stab-IT II Connector, M brkts., w/pigtail & heavy duty UBS			(9) 1/2"-3/4", (1) 3/4"-1" TKO	(1) 1/2", (1) 1/2"-3/4" TKO	25	–
254S*	(2) Stab-IT II Connectors on top, w/pigtail		6	(8) 1/2"-3/4" TKO	(1) 1/2", (1) 1/2"-3/4" TKO	25	–
254SCM*	(2) Stab-IT II Connectors on top, w/Pigtail, Cable Mgmt. Clips & UBS			(8) 1/2"-3/4" TKO	(1) 1/2", (1) 1/2"-3/4" TKO	25	–
987	Heavy duty Universal Box Support (UBS)	–		–		25	–

*Notes: * cULus Listed. All other models are UL Listed.*

New, Heavy Duty UBS (987), accommodates 2.5" - 6" stud depths featured on models ending in HF

All models with an "M" or "H" after the 3 digit number feature RACO's Universal Box Support. This excludes part numbers ending with "HF"

See end of section (Pg A89) for detailed drawings »

4-11/16" Stab-IT® II Box Assemblies for Pre-Fab

Save time and effort!

AW1.1

AW1.7

AW1.9

AW4.1

AW4.7

AW4.9

Save time and labor on any job with RACO ProReady™ prefab assemblies. Components are pre-assembled, ready to install right out of the box. Ensure quality while reducing material and labor cost, even jobsite waste.

Applications

- For any job where flexible armored cable is use and the project has repeating electrical needs.

Features

- All components preassembled, ready to install
- Open Center Brackets pre-set for either 16" or 24" studs

Stab-IT II 4-11/16" Boxes

- Stab-IT connector holds 3 cables
- Built-in cable management clips provide first means of support
- Model ending in HF feature a Heavy Duty Universal Box Support

Adjustable Mud Rings & Hinged Adjustable Mud Rings

- 1/2" to 1-3/8" adjustability range
- All screws inside the ring to eliminate damage from router
- Adjustment screws visible and accessible after the device is installed
- Hinged design allows easy and quick access to install wiring
- For use on wood or metal studs
- Designed and assembled in USA
- UL LISTED

Components

- 252MSCMHF: 4-11/16" Sq., 2-1/8" deep, (1) STAB-IT II connector, M Bracket, Pigtail Heavy Duty Universal Box Support, and Cable Management Clip
- 252SCM: 4-11/16" Sq., 2-1/8" deep, (1) STAB-IT II connector, Pigtail and Cable Management Clip
- 265: 4-11/16" Sq., 2-1/8" deep, Raised Ground
- 9020R: Adjustable Open Center Bracket – 16" to 24"
- 838: 1G Fixed Mud Ring 3/4"
- 840: 2G Fixed Mud Ring 3/4"
- 868AMR: 1G Adjustable Mud Ring
- 869AMR: 2G Adjustable Mud Ring
- 843HAMR 1G Hinged Adjustable Mud Ring
- 818HAMR 2G Hinged Adjustable Mud Ring

4-11/16" Square Box/Pre-Fab Assemblies

Catalog #	Description	Cu. In. Capacity	Ctn. Qty.
AW1.1	252MSCMHF + 838 / 1G - Mud Ring, Raised 3/4" / M Bracket	42.0	12
AW1.7	252MSCMHF + 843HAMR/1G Hinged Adjustable Mud Ring/M Bracket	42.0	12
AW1.9	252MSCMHF + 868AMR / 1G -Adjustable Mud Ring / M Bracket	42.0	10
AW4.1	252MSCMHF + 840 / 2G - Mud Ring, Raised 3/4" / M Bracket	42.0	12
AW4.7	252MSCMHF + 818HAMR/2G Hinged Adjustable Mud Ring/M Bracket	42.0	12
AW4.9	252MSCMHF + 869AMR / 2G - Adjustable Mud Ring / M Bracket	42.0	10

AW Box Assemblies

AW2.1.16

AW2.7.16

AW2.9.16

AW5.1.16

AW5.7.16

AW5.9.16

AW3.1.16

AW3.7.16

AW3.9.16

AW6.1.16

AW6.7.16

AW6.9.16

AW2.1.24

AW2.7.24

AW2.9.24

AW5.1.24

AW5.7.24

AW5.9.24

AW3.1.24

AW3.7.24

AW3.9.24

AW6.1.24

AW6.7.24

AW6.9.24

4-11/16″ Square Box/Pre-Fab Assemblies

Catalog No.	Description	Cu. In. Capacity	Ctn. Qty.
AW2.1.16	9020R + 252SCM + 838 / 1G - Mud Ring, Raised 3/4″ / 16″ Studs	42.0	6
AW2.7.16	9020R + 252SCM + 843HAMR/1G Hinged Adjustable Mud Ring/16″ Studs	42.0	6
AW2.9.16	9020R + 252SCM + 868AMR / 1G - Adjustable Mud Ring / 16″ Studs	42.0	6
AW5.1.16	9020R + 252SCM + 840 / 2G - Mud Ring, Raised 3/4″ / 16″ Studs	42.0	6
AW5.7.16	9020R + 252SCM + 818HAMR/2G Hinged Adjustable Mud Ring/16″ Studs	42.0	6
AW5.9.16	9020R + 252SCM + 869AMR / 2G - Adjustable Mud Ring / 16″ Studs	42.0	6
AW3.1.16	9020R + 252SCM + 265 + (2) 838 / 1G - Mud Ring, Raised 3/4″ / 16″ Studs	42.0	6
AW3.7.16	9020R + 252SCM + 265 + (2) 843HAMR/1G Hinged Adjustable Mud Ring/16″ Studs	42.0 + 42.0	6
AW3.9.16	9020R + 252SCM + 265 + (2) 868AMR / 1G - Adjustable Mud Ring / 16″ Studs	42.0	6
AW6.1.16	"9020R + (252SCM + 840) / 2G - Mud Ring, Raised 3/4"" + (265 + 838) / 1G - Mud Ring, Raised 3/4"" / 16"" Studs"	42.0 + 42.0	6
AW6.7.16	"9020R + (252SCM + 818HAMR) 2G Hinged Adjustable Mud Ring + (265 + 843HAMR), 1G Hinged Adjustable Mud Ring/16"" Studs"	42.0 + 42.0	6
AW6.9.16	"9020R + (252SCM + 869AMR) / 2G - Adj. Mud Ring + (265 + 868AMR) / 1G - Adj. Mud Ring / 16"" Studs"	42.0	6
AW2.1.24	9020R + 252SCM + 838 / 1G - Mud Ring, Raised 3/4″ / 24″ Studs	42.0	6
AW2.7.24	9020R + 252SCM + 843HAMR 1G Hinged Adjustable Mud Ring/24″ Studs	42.0	6
AW2.9.24	9020R + 252SCM + 868AMR / 1G - Adjustable Mud Ring / 24″ Studs	42.0	6
AW3.7.24	9020R + 252SCM + 265 + (2) 843HAMR/1G Hinged Adjustable Mud Ring/24″ Studs	42.0 + 42.0	6
AW5.1.24	9020R + 252SCM + 840 / 2G - Mud Ring, Raised 3/4″ / 24″ Studs	42.0	6
AW5.7.24	9020R + 252SCM+ 818HAMR/2G Hinged Adjustable Mud Ring/24″ Studs	42.0	6
AW5.9.24	9020R + 252SCM + 869AMR /2G - Adjustable Mud Ring / 24″ Studs	42.0	6
AW3.1.24	9020R + 252SCM + 265 + (2) 838 / 1G - Mud Ring, Raised 3/4″ / 24″ Studs	42.0 + 42.0	6
AW3.9.24	9020R + 252SCM + 265 + (2) 868AMR / 1G - Adj. Mud Ring / 24″ Studs	42.0 + 42.0	6
AW6.1.24	9020R + (252SCM + 840) / 2G - Mud Ring, Raised 3/4″ + (265 + 838) / 1G - Mud Ring, Raised 3/4″ / 24″ Studs	42.0 + 42.0	6
AW6.7.24	"9020R + (252SCM + 818HAMR) 2G Hinged Adjustable Mud Ring + (265 + 843HAMR), 1G Hinged Adjustable Mud Ring/24"" Studs"	42.0 + 42.0	6
AW6.9.24	"9020R + (252SCM + 869AMR) / 2G - Adj. Mud Ring + (265 + 868AMR) / 1G - Adj. Mud Ring / 24"" Studs"	42.0 + 42.0	6

4-11/16" Square Boxes – Welded with Conduit KOs

257, 8257, 8257SP

258

259

265, 8265, 8265SP

911-12

257SM

258SM

257F

257H, 257HS

257M

254

266 BOX-LOC®

Applications

- RACO® 4-11/16" Boxes are used for a wide variety of industrial applications where larger sized conductors or wiring devices are needed and more volume is required

Product Features

- Reference the Box Selection section in the front of this catalog for complete description of bracket types and features
- BOX-LOC® (MS) Bracket Box is a snap to install. Place the bracket on the open side of the stud first. Slots in the bracket engage the lip of the stud and actually crimp it as you press the bracket on the stud, quickly locking it in place
- Combination screw heads provide for faster installation
- TKO® knockouts allow for design and installation flexibility
- UBS Support - Welded to box, preset bend points to work with wall thickness 2-1/2" to 6"
- Red boxes, covers and extensions for dedicated life safety alarm circuits

Compliance

- UL LISTED
- **600V**, Per U.L. 514-A, suitable for use without a bonding jumper in circuits up to 600 volts

See end of section (Pg A89) for detailed drawings »

4-11/16" Square Boxes

Cat. #	Description	Cubic Inches (CM³)	Knockouts		Std. Pkg.	Bar Code
			Sides Conduit	Bottom Conduit		
2-1/8" Deep – *Welded with Conduit KOs*						
257	**600V**, Raised Ground	42.0 (688.2)	(12) TKO	(1) 1/2", (3) TKO	25	—
8257	**600V**, Raised Ground	42.0 (688.2)	(12) TKO	(1) 1/2", (3) TKO	25	IIIIIIII
8257SP	**600V**, Raised Ground	42.0 (688.2)	(12) TKO	(1) 1/2", (3) TKO	20	IIIIIIII
258	**600V**, Raised Ground	42.0 (688.2)	(8) 1"	(1) 1/2", (3) TKO	25	—
259*	**600V**, Raised Ground	42.0 (688.2)	(6) 1-1/4"	(1) 1/2", (3) TKO	25	—
265	**600V**, Raised Ground	42.0 (688.2)	(4) 3/4", (4) 1"	(1) 1/2", (3) TKO	25	—
8265	**600V**, Raised Ground	42.0 (688.2)	(4) 3/4", (4) 1"	(1) 1/2", (3) TKO	25	IIIIIIII
8265SP	**600V**, Raised Ground	42.0 (688.2)	(4) 3/4", (4) 1"	(1) 1/2", (3) TKO	20	IIIIIIII
911-12	**600V**, Raised Ground, Painted Red	42.0 (688.2)	(12) TKO	(1) 1/2", (3) TKO	25	—
257SM	**600V**, Raised Ground, 10" #12 Stranded Copper Pigtail	42.0 (688.2)	(12) TKO	(1) 1/2" (3) TKO	25	IIIIIIII
258SM	**600V**, Raised Ground, 10" #12 Stranded Copper Pigtail	42.0 (688.2)	(8) 1"	(1) 1/2" (3) TKO	25	IIIIIIII
257F	**600V**, Raised Ground, 8" #12 Solid Copper Pigtail, UBS	42.0 (688.2)	(12) TKO	(1) 1/2" (3) TKO	20	—
Bracketed Boxes, 2-1/8" Deep – *Welded with Conduit KOs*						
257H	**600V**, Raised Ground, 8" #12 Solid Copper Pigtail, UBS, HM	42.0 (688.2)	(12) TKO	(1) 1/2" (3) TKO	20	—
257HS	**600V**, Raised Ground, 10" #12 Stranded Copper Pigtail, UBS, HM	42.0 (688.2)	(12) TKO	(1) 1/2" (3) TKO	20	—
257M	**600V**, Raised Ground, 8" #12 Solid Copper Pigtail, UBS, HM	42.0 (688.2)	(12) TKO	(1) 1/2" (3) TKO	20	—
254	**600V**, Raised Ground, FM	42.0 (688.2)	(9) TKO	(1) 1/2", (3) TKO	25	IIIIIIII
266	**600V**, Raised Ground, BOX-LOC®, MS Flush, Provided w/Far-side support (part #978)	42.0 (688.2)	(9) TKO	(1) 1/2" (3) TKO	25	IIIIIIII

*Notes: * Not UL Rated.*

Square Boxes and Covers

4-11/16" Adjustable Mud Rings

Applications

- Maintain code-compliant installations in hospitals, health care and multi-family applications. Great for use with ceramic tile

Product Features

- 1/2" to 1-3/8" adjustability range
- Depth adjusted by 2 screws located on opposite sides
- Adjustment screws are clearly visible and accessible even after device is installed
- All screws are inside of ring eliminating damage from router
- Design allows 2-gang cover to be installed without removing box screws
- For use with 2-1/8" deep boxes only

Compliance

- c UL US LISTED

868AMR

869AMR

Adjustable Mud Rings

Catalog #	Description	Std. Pkg.
868AMR	1-Gang Adjustable Mud Ring For 4-11/16" Sq. Boxes	25
869AMR	2-Gang Adjustable Mud Ring For 4-11/16" Sq. Boxes	25

4-11/16" Square Covers

832, 832SP

833, 8833-5

911-11

837, 8837

843

838

839

842

898

899

Applications

- Covers are used to close an outlet box
- Raised device covers are used for mounting switches or receptacles

Product Features

- Red boxes, covers and extensions for dedicated life safety alarm circuits

Compliance

- c UL US LISTED

4-11/16" Square Flat Covers

Cat. #	Description	Std. Pkg.	Bar Code
832	Flat, Blank	50	IIIIIIIII
832SP	Flat, Blank	25	IIIIIIIII
833	Flat, 1/2" KO, Centered	50	IIIIIIIII
8833-5*	Flat, 1/2" KO, Centered	50	IIIIIIIII
911-11	Flat, Blank, Painted Red	50	—

*Notes: *5 Bundles of 10 – sold in carton quantities only.*

4-11/16" Square Single Device and Tile Covers

Cat. #	Description	Cu. In. (CM^3)	Std. Pkg.	Bar Code
837	Raised 1/2"	3.5 (57.3)	25	—
8837	Raised 1/2"	3.5 (57.3)	25	IIIIIIIII
843	Raised 5/8"	4.5 (73.7)	25	IIIIIIIII
838	Raised 3/4"	5.5 (90.1)	25	—
839	Raised 1"	7.5 (122.9)	25	—
842	Raised 1-1/4"	9.5 (155.6)	25	—
898	Raised 1-1/2"	11.0 (180.2)	20	—
899	Raised 2"	16.0 (262.2)	20	—

Square Boxes and Covers

4-11/16” Square Covers

841

818

840

819

820

885

855, 859

911-16, 911-17

829

835

Applications

- RACO® 4-11/16” raised device covers are for mounting switches or receptacles
- Raised fixture covers are used where fixtures will be installed

Product Features

- Red boxes, covers and extensions for dedicated life safety alarm circuits

Compliance

- c UL US LISTED

4-11/16” Square Two Device and Tile Covers

Catalog #	Description	Cubic In. (CM³)	Std. Pkg.	Bar Code
841	Raised 1/2″	5.5 (90.3)	25	IIIIIIII
818	Raised 5/8″	7.3 (119.6)	25	—
840	Raised 3/4″	8.8 (144.2)	25	—
819	Raised 1″	12.0 (196.6)	25	—
820	Raised 1-1/4″	15.0 (245.8)	25	—
885	Raised 1-1/2″	15.5 (254.0)	20	—
855	Raised 5/8″, For Life Safety Appliances & Emergency Exit Signs	8.3 (136.0)	25	—
859	Raised 1-1/4″, For Life Safety Appliances & Emergency Exit Signs	16.0 (262.0)	12	—
911-16	Raised 5/8″, For Life Safety Appliances & Emergency Exit Signs, Painted Red	8.3 (136.0)	25	—
911-17	Raised 1-1/4″, For Life Safety Appliances & Emergency Exit Signs, Painted Red	16.0 (262.0)	12	—

4-11/16” Square Fixture Covers

Cat. #	Description	Cubic Inches (CM³)	Recommended Max. Loads		Std. Pkg.	Bar Code
			Ceiling Fan (Dynamic) Lbs.	Fixture (Static) Lbs.		
829	Raised 1/2″, Open, Ears 2-3/4″ O.C.	3.0 (49.6)	No	50	25	IIIIIIII
835	Raised 5/8″, Open, Ears 2-3/4″ O.C.	4.0 (65.5)	No	50	25	—

Square Boxes and Covers

4-11/16" Square Exposed Work Covers

856

857

858

870RAC

878

887

888

959

972

979

881RAC

876

Applications

- RACO® surface covers are used to support switches or receptacles in areas where the box is surface mounted or positioned in exposed work applications

Product Features

- RACO® exposed work covers include required hardware for mounting the receptacle(s)
- RACO® Exposed work covers meet the requirements of the 2020 NEC Article 250.146 (A). No bonding jumper is required for covers with:
  1. Crushed corners
  2. Two or more device attachment fasteners that are permanent with thread-locking, screws, or nut-locking means
  3. A lock washer or equivalent
- Hardware and cover are packed in a polybag with printed catalog number, compliances and installation instructions

Compliance

- c UL us LISTED

4-11/16" Exposed Work Covers

Catalog #	Description	Cubic In. (CM^3)	Std. Pkg.	Bar Code
856	1 Decorator Device or GFCI	10.3 (168.7)	10	IIIIIIII
857	2 Decorator devices or GFCI	10.3 (168.7)	10	IIIIIIII
858	1 Toggle Switch and 1 GFCI	10.3 (168.7)	10	IIIIIIII
870RAC	1 Toggle Switch	10.3 (168.7)	10	IIIIIIII
878	30-50A Receptacle 2.141" Dia.	10.3 (168.7)	10	IIIIIIII
887	20A Receptacle 1.594" Dia.	10.3 (168.7)	10	IIIIIIII
888	30-60A Receptacle 2.625" Dia.	10.3 (168.7)	10	IIIIIIII
959	1 Duplex and 1 GFCI	10.3 (168.7)	10	IIIIIIII
972	1 Duplex Receptacle	10.3 (168.7)	10	IIIIIIII
979	2 Duplex Receptacles	10.3 (168.7)	10	IIIIIIII
881RAC	2 Toggle Switches	10.3 (168.7)	10	IIIIIIII
876	1 Toggle Switch and 1 Duplex Receptacle	10.3 (168.7)	10	IIIIIIII

NEW PRODUCT

5″ Square Data Box

905SQ

9030G

995

Large capacity box for audio, video, data, and power applications. This 5″ data box provides ample space for high speed and fiber optical cable bends. Extra-large knockouts are included for pulling pre-terminated cables.

5″ Square Data Box

Catalog #	Description	Carton Qty.	I2OF5 Bar Code
905SQ	5” Square Box Bracket	25	50050169549051
9030G	Ultimate G Series Mounting Bracket	25	50050169985491
995	Far Side Support for Box Bracket	50	5005016998552

Applications

- Mounts with 905SQ to stud or 9030G open center bracket
- Built for use with 9030G open center bracket
- Mounts to box support ceiling to terminate home runs

Product Features

- Accepts standard 4-11/16” square mud rings and covers without an adapter plate
- 3-1/4″ deep box
- 76 cu inch capacity
- 5SQ200 has includes knockout sizes 1/2″ through 2″
- 5SQTR includes 1/2″ knockout sizes 1/2″-3/4″ TKO's and 3/4″-1″ TKO's.
- 5SQ200 has two pre-installed raised ground screws
- 5SQTR has two 1/4″ Treaded Hubs on side and back

Compliance

- c UL us LISTED

5SQ200

5SQTR

5″ Square Data Box

Catalog #	Description	Carton Qty.	I2OF5 Bar Code
5SQ200	5″ Square Data Box	20	50050169549044
5SQTR	5″ Square Junction Box	20	50050169549068

Life Safety Support Products - Immediate Identification

911-9

911-6

911-12

911-3

911-4

911-15

911-2

911-1

Applications

- RACO® Red boxes and covers allow inspector or building owner to immediately identify alarm/fire or life safety systems

Product Features

- 911-2, 911-1 boxes have 3-3/4" opening in wall that allows for a margin of error when using a standard 4" square cover
- 911-15 accepts all 4-11/16" square covers and mudrings

Compliance

- UL LISTED

Life Safety Steel Wall Boxes and Extension Rings – *Painted Red*

Cat. #	Description	Cubic Inches (CM³)	Knockouts		Std. Pkg.	Bar Code
			Sides Conduit	Bottom Conduit		
911-9	1-1/2" Depth, Welded, 4" Square	21.0 (344.1)	(8) 1/2", (4) TKO	(2) 1/2", 2 TKO	50	—
911-6	1-1/2" Depth, 4" Square, Drawn Extension Ring	22.5 (368.7)	(8) 1/2", (4) 3/4"	—	50	—
911-12	2-1/8" Depth, Welded, 4-11/16" Square	42.0 (688.2)	(12) TKO	(1) 1/2", (3) TKO	25	—
911-3	2-1/8" Depth, Welded, 4" Square	30.3 (496.5)	(8) 1/2", (4) TKO	(3) 1/2", 2 TKO	25	—
911-4	2-1/8" Depth, Welded, 4" Square, FM Bracket	30.3 (496.5)	(6) 1/2", (3) TKO	(3) 1/2", 2 TKO	25	—
911-15	3-1/4" Depth Back Box, Welded, 4-11/16" Square	66.7 (1093.0)	(2) 1/2" - 3/4" TKO, (2) 1" - 1-1/4"TKO, (2) 1" - 2" Conc. KO	(2) 3/4"- 1" TKO, (2) 1/2" KO	10	—
911-2	3-1/2" Depth, Welded, 3-3/4" Square	45.0 (737.4)	(12) 1/2"- 3/4" Concentric	(4) 1/2" 3/4" Concentric	25	—
911-1	3-1/2" Depth, Welded, 3-3/4" Square, FM Bracket	45.0 (737.4)	(10) 1/2"-3/4" Concentric	(4) 1/2"- 3/4" Concentric	10	—

See end of section (Pg A88 - A89) for detailed drawings »

Life Safety Support Products - Immediate Identification

Applications

- RACO® Red boxes and covers allow inspector or building owner to immediately identify alarm/fire or life safety systems

Product Features

- Red boxes, covers and extensions for dedicated life safety alarm circuits

Compliance

- c UL us LISTED

911-16, 911-17

855, 859

911-8

911-11

Life Safety Steel Wall Boxes Covers

Catalog #	Description	Cubic In. (CM³)	Std. Pkg.	Bar Code
911-16	4-11/16" Sq. x 4" Sq. Adapter, 5/8" Raised, Painted Red	8.3 (136.0)	25	—
911-17	4-11/16" Sq. x 4" Sq. Adapter, 1-1/4" Raised, Painted Red	16.0 (262.0)	12	—
855	4-11/16" Sq. x 4" Sq. Adapter, 5/8" Raised	8.3 (136.0)	25	—
859	4-11/16" Sq. x 4" Sq. Adapter, 1-1/4" Raised	16.0 (262.0)	12	—
911-8	4" Sq., Flat Blank Cover, Painted Red	—	50	—
911-11	4-11/16" Sq., Flat Blank Cover, Painted Red	—	50	—

Applications

- Low voltage partitions may be added to conduit-type boxes to divide power from voice/data
- Partitions must be used with raised covers
- RACO® RETRO-RING® is used to position any depth, 4" square steel junction box in a sheet rock covered wall cavity
- Use 205RAC is used in old work life safety appliance installations
- 206RAC is used in old work installations where one or two devices are required

Product Features

- RACO® RETRO-RING® works in 3/8" to 1-1/2" thick wall or ceiling applications
- Small footprint is covered by most popular life safety devices
- Steel old work wings allow for secure mounting of box and devices to wall
- Includes one wall template per carton
- 206RAC allows for installation of steel low voltage partition for power/data applications. One or two devices mount directly to 206RAC

Compliance

- UL LISTED

706RAC, 707RAC

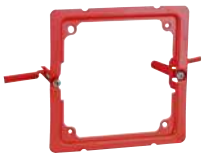
911-19

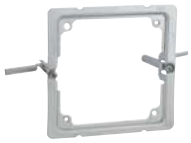
205RAC

206RAC, 8206RAC

Low Voltage Box Partition

Catalog #	Description	Std. Pkg.	Bar Code
706RAC	Fits 1/4" to 1" Cover Depth (#777, 8777-0, 778, 769, 8769, 8778, 779, 8779, 780)	25	—
707RAC	Fits 1/4" to 1" Cover Depth (#777, 8777-0, 778, 769, 8769, 8778, 779, 8779, 780)	25	—

Notes: Boxes, covers, and partitions must be ordered separately.
For 5/8" cover depth, use the 3/4" break.
Partitions are usable but not UL listed for 4-11/16" sq. box.

Life Safety Steel Wall Box Mounting Brackets

Catalog #	Description	Std. Pkg.	Bar Code
205RAC	Old Work, 4" Sq. Box Mounting of Life Safety Support	20	—
206RAC	Old Work, 4" Sq. Box Mounting of One or Two Device Applications	20	—
8206RAC	Old Work, 4" Sq. Box Mounting of One or Two Device Applications	10	IIIIIIII
911-19	Old Work, 4" Sq. Box Mounting of Life Safety Support, Painted Red	20	—

Notes: Low voltage partitions are not UL Listed.
Boxes, covers, and partitions must be ordered separately.
Partitions are usable but not UL listed for 4-11/16" sq. box.

Square Boxes and Covers

Large Capacity Boxes for Audio, Video, Power and Data

Applications

- RACO® Large capacity boxes are used for audio, video, data and power applications providing ample space for Cat 6A and fiber optic cable bends

260 Product Features

- Large capacity design measures 4-11/16" H x 4-11/16" W x 3-1/4" D
- Accepts standard 4-11/16" square device and flat covers
- Ground screws provided

263 Product Features

- Large capacity design measures 4-11/16" H x 7-3/4" W x 3-1/4" D
- Accepts standard 4" square device and flat covers or 792, 793, 794 3-gang device covers
- Built-in tabs allow for spanner bars
- Includes 1/2" thru 2" knockouts
- Accepts 981 voltage partition (UL Listed)
- Ground screws provided

255 and 256 Product Features

- Large capacity design measures 3-3/4" H x 3-3/4" W x 3-1/2" D
- Accepts standard 4" square device and flat covers

Compliance

- UL LISTED

See end of section (Pg A88,) for detailed drawings »

260

260H

263

256

255

Large Capacity Steel Wall Boxes

Cat. #	Description	Cubic Inches (CM³)	Knockouts		Std. Pkg.	Bar Code
			Sides Conduit	Bottom Conduit		
4-11/16" Boxes, 3-1/4" Deep – *Welded with Conduit KOs*						
260	Raised Ground	66.7 (1093)	(2) 1/2" - 3/4" TKO, (2) 1" - 1-1/4" TKO, (2) 1" - 2" Conc. KO	(2) 3/4"- 1" TKO, (2) 1/2" KO	10	—
260H	Raised Ground, H Bracket For Side Support	66.7 (1093)	(2) 1/2" - 3/4" TKO, (2) 1" - 1-1/4" TKO, (2) 1" - 2" Conc. KO	(2) 3/4"- 1" TKO, (2) 1/2" KO	10	—
263	Raised Ground	113.3 (1856.6)	(6) 1/2"- 3/4" TKO, (2) 3/4" - 1" TKO, (2) 1"- 1-1/4" TKO, (2) 1" - 2" Conc. KO	(2) 1/2"-3/4" TKO, (2) 3/4"- 1" TKO, (2) 1"- 1-1/4" TKO	6	—
3-3/4" Square Boxes, 3-1/2" Deep – *Welded with Conduit KOs*						
256	—	45.0 (737.4)	(12) 1/2"-3/4" Concentric	(4) 1/2"-3/4" Concentric	25	IIIIIIII
255	FM Bracket	45.0 (737.4)	(10) 1/2"-3/4" Concentric	(4) 1/2"-3/4" Concentric	10	IIIIIIII

AV Wall Boxes

Applications

- RACO® AV Wall Boxes provide an ideal solution for in-wall applications requiring data, AV and power
- Perfect for Category 6 and 6A fiber optic cables that require a larger bend radius
- Designed to install independently or ganged together to support multiple devices
- Accommodates industry standard wallplates

Product Features

- 2-gang or 3-gang
- Knockouts from 1/2" up to 2"
- 4" depth accepts any device
- Concentric 1/2"-3/4" knockouts for pre-connectorized AV cables
- Eccentric 1/2"- 3/4" knockouts
- Raised ground provision in each gang
- Accepts low voltage partition
- NEMA spaced device mounting, accepts industry standard wallplates
- Adjustable stud mounting brackets built in to accommodate different stud and sheetrock thickness
- Adjustable far side support
- Suitable for masonry application

Compliance

- UL LISTED

985

989

986

4" Deep, Gangable AV Wall Boxes – *For Data and Power*

Cat. #	Description	Cubic Inches (CM³)	Knockouts			Std. Pkg.	Bar Code
			Top	Bottom	Back		
985	2-Gang, 2" KO	54 (884.9)	(2)1/2", (2)1/2"- 3/4" TKO	(1) 1", 1-1/4", 1-1/2", 2	(2)1/2" - 3/4" TKO	10	IIIIIIII
986	3-Gang, 2"	79 (1294.5)	(3)1/2", (3)1/2"- 3/4" TKO	(1)1/2", (1)1/2"- 3/4" TKO, (1)1", 1-1/4" - 1-1/2", 2"	(3) 1/2" - 3/4" TKO	6	IIIIIIII
989	Low Voltage Partition	—	—			25	IIIIIIII

Covers and Partitions for Large Capacity Boxes

Applications

- RACO® Large capacity boxes are used for audio, video, data and power applications providing ample space for Cat 6A and fiber optic cable bends
- 792, 793 and 794 covers are solely for RACO® 263 data box. The 3-gang raised covers are 5/8", 3/4" and 1-1/4" raised respectively
- 855 is designed to reduce 4-11/16" square box to 4" sq. box openings

Product Features

- Use with standard 4" square single or double mudrings or 3 gangs special covers (263)
- 855 provides flush mounting of lighting controllers, exit signs and life safety appliances
- Accepts UL Listed Voltage Partition, Cat. No. 981

Compliance

- c UL us LISTED

792

793

794

855, 859

981

Covers and Partitions

Cat. #	Description	Cubic In. (CM³)	Fits Cat. #	Std. Pkg.	Bar Code
3-Gang Raised Device Covers – *For 263 Box*					
792	5/8" Raised	10.3 (168.8)	263	10	—
793	3/4" Raised	12.7 (208.1)	263	10	—
794	1-1/4" Raised	24.2 (396.6)	263	5	—
2-Gang Raised Device Cover – *For 4-11/16" Box*					
855	5/8" Raised, For Life Safety Appliances & Emergency Exit Signs	8.3 (136.0)	260 & 911-15	25	—
859	1-1/4" Raised, For Life Safety Appliances & Emergency Exit Signs	16.0 (262.0)	260 & 911-15	12	—
Voltage Partition					
981	For 5/8", 3/4", 1-1/4" covers for 260, 260H, & 263 boxes	—	260 & 263	25	—

Transition Box and Cover

Dugout Transition Box

Applications

- RACO's Dugout box offers the quickest and easiest way to transition from flexible armored cable to conduit before entering the circuit panel. Specifically designed for commercial applications, the Dugout box builds on the popular concept of our Grand Slam box. This roomy rectangular model features plenty of space for wiring along with 21 of our built-in Stab-IT cable clamps, which hold up to 42 MC cables! Our unique clamps are field-proven to install up to 3X faster than traditional MC connectors. Four concentric knockouts are provided for either ½" or ¾" conduit out to the circuit panel. For wall or ceiling mounting. The Dugout box offers more labor savings and installation flexibility than any other transition box on the market.

Product Features

- Designed for quick installation of flex, MC, MCI, MCI-A, AC and HCF cable
- Stab-IT® clamp has been tested at over 3X faster than traditional MC connectors
- Cover included
- Accepts cable sizes from 14/2 up to 10/3 for most cable types
- UL Listed
- Designed and assembled in the USA

Compliance

- UL LISTED

SC082006STRC

Built-in Stab-IT® clamps for MC

Transition Box with Built-in Stab-IT® Clamps

Catalog #	Description	Knockouts	Stab-IT® Clamps	Std. Pkg.	Bar Code
SC082006STRC	8" x 20" x 6" Transition Box & Cover	(4)1/2" & 3/4" Concentric	21 (14/2 to 10/3) up to 42 Cables	1	—

Stab-IT Connector

Stab-IT® Connector

Cat. #	Size	Std. Pkg.	Bar Code
989ST	Stab-IT® Connector (accepts 2 cables)	50	—

Upgraded Grand Slam Box Now with Built In Stab-IT® II Connectors

NEW PRODUCT

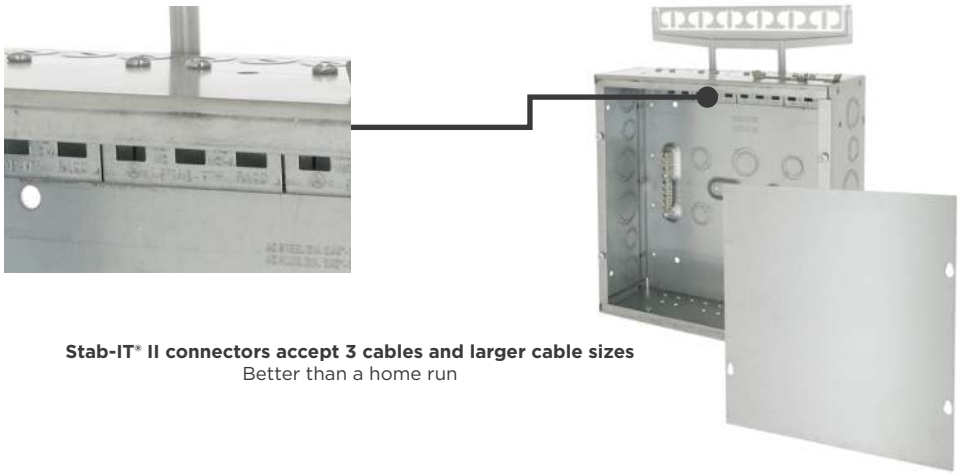

Stab-IT® II connectors accept 3 cables and larger cable sizes
Better than a home run

Applications

- RACO's Grand Slam Box is the quickest and easiest way to terminate home runs branch circuits and other electrical wiring. Specifically designed for commercial applications, the Grand Slam Box offers both the flexibility and space desired in a junction box. Featuring RACO's Stab-IT® II connectors for MC, built-in ground bar, and cable management. The Grand Slam Box offers the most labor savings and flexibility of any home run box on the market.

Product Features

- Stab-IT® II clamp has been field proven to be over 3X faster than traditional MC connectors
- Ground bar pre-installed
- Cable management with 2 multifunction clips
- Surface mount cover
- Available with and without concentric knockouts on side and back for easy access
- Optional conduit support plate
- NEMA 1 Rating for Indoors
- Additional Stab-IT® II connectors can be added

Compliance

- UL LISTED

Surface Mount Cover & Ground Bar Included

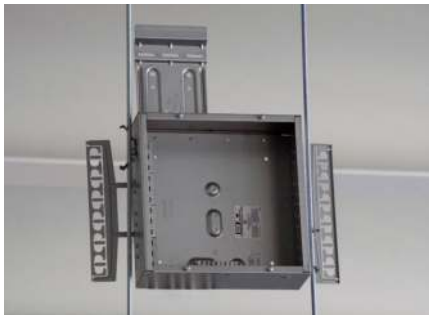

Grand Slam Box installed using Multi Function Clips

Conduit Support Plate
(sold separately)

Stab-IT® II Connector

Square Boxes and Covers

Grand Slam Box

Cat. No.	Description	Dimensions	Knockouts	Built-in Stab-IT® II Clamps	Cu.In. Cap.	Carton Qty.
GS883S	8″ x 8″ Junction Box (Surface Cvr. & Grnd. Bar Included)	8″ x 8″ x 3″	(12) 1/2″ & 3/4″ Concentric (5) 3/4″ & 1″ Concentric	3 (14/2 to 10/3) Up to 9 Cables	179	1
GS12124S	12″ x 12″ Junction Box (Surface Cvr. & Grnd. Bar Included)	12″ x 12″ x 4″	(12) 1/2″ & 3/4″ Concentric (9) 3/4″ & 1″ Concentric (8) 1″ & 1-1/4″ Concentric	4 (14/2 to 10/3) Up to 12 Cables	546	1
GS883SNK	8″ x 8″ Junction Box (No Knockouts, Surface Cvr. & Grnd. Bar Included)	8″ x 8″ x 3″	—	3 (14/2 to 10/3) Up to 9 Cables	179	1
GS12124SNK	12″ x 12″ Junction Box (No Knockouts, Surface Cvr. & Grnd. Bar Included)	12″ x 12″ x 4″	—	4 (14/2 to 10/3) Up to 12 Cables	546	1
GS883SCM	8″ x 8″ Junction Box (Cable management, 2 Multi Function Clips, Surface Cvr. & Grnd. Bar Included)	8″ x 8″ x 3″	(12) 1/2″ & 3/4″ Concentric (5) 3/4″ & 1″ Concentric	3 (14/2 to 10/3) Up to 9 Cables	179	1
GS12124SCM	12″ x 12″ Junction Box (Cable management, 2 Multi Function Clips, Surface Cvr. & Grnd. Bar Included)	12″ x 12″ x 4″	(12) 1/2″ & 3/4″ Concentric (9) 3/4″ & 1″ Concentric (8) 1″ & 1-1/4″ Concentric	4 (14/2 to 10/3) Up to 12 Cables	546	1
GS883SNKCM	8″ x 8″ Junction Box (No Knockouts, Cable management, 2 Multi Function Clips, Surface Cvr. & Grnd. Bar Included)	8″ x 8″ x 3″	—	3 (14/2 to 10/3) Up to 9 Cables	179	1
GS12124SNKCM	12″ x 12″ Junction Box (No Knockouts, Cable management, 2 Multi Function Clips, Surface Cvr. & Grnd. Bar Included)	12″ x 12″ x 4″	—	4 (14/2 to 10/3) Up to 12 Cables	546	1

Accessories

Cat. No.	Description	Carton Qty.
9100SP	Grand Slam conduit support plate	10
989ST2	STAB-iT® II Connector Accessory (accepts 3 cables) Works with all Grand Slam boxes	50

Cable types and ranges of Stab-IT® II clamp

Cable Type	Cable Range	Cable Range Diameter
AC Steel & Aluminum	14-2, 14-3, 14-4, 12-2, 12-3, 12-4, 10-2, 10-3	0.44″ · 0.62″
HCF AC Steel	14-2, 14-3, 14-4, 12-2, 12-3, 10-2, 10-3	
HCF AC Aluminum	12-2, 12-3, 12-4, 10-2, 10-3	0.42″ · 0.62″
MC Steel & Aluminum	14-2, 14-3, 14-4, 12-2, 12-3, 12-4, 10-2, 10-3	
MCI-A Steel & Aluminum	14-2, 14-3, 14-4, 12-2, 12-3, 12-4, 10-2, 10-3	
HCF MCI-A Steel	12-2, 12-3, 10-2	0.38″ · 0.62″
HCF MCI-A Aluminum	14-2, 14-3, 14-4, 12-2, 12-3, 12-4, 10-2, 10-3	
3/8 TRADE SIZE FLEX. RWFMC CONDUIT STEEL & ALUMINUM Anti Short Bushing Required		
CABLE RANGE .400″ DIA. MIN. TO .605″ DIA. MAX.		

Notes: Cable Armor must comply with NEC 250.96.

To remove cable unscrew clamp from the box then pull clamp off cable.

To install more cables use any of the RACO 38RAC or 40RAC push-in cable connectors.

Ceiling Fan and Fixture Support Products

Applications

- RACO® Ceiling Support Boxes are specifically designed for ceiling fan and ceiling or wall light fixture support per NEC 314.27(C)

Product Features

- 1/2" side knockouts (294, 294-1, 296, 296-1 and 299)
- No protruding ground screw or fan mounting screws allows easy installation
- #10-32, 1" long ceiling fan screws provided and provision for #8-32 fixture mounting screw (294-1, 294, 296-1, 296 and 299)
- Setback tab allows for easy box installation of different wall thickness (294-1, 294)
- Metal protection plate eliminates debris or damage to wiring
- Easy to follow instructions and mounting hardware included

Gorilla Ring® Concrete Ring Application

- Concrete rings are used with poured deck (floor) in high-rise construction
- GORILLA RING features mounting screws that allow for safe and secure mounting of any chandeliers, or lighting fixtures 150 lbs. or less
- Double row of KO's allow greater installation flexibility with a minimum of bends or offsets for working around reinforcing rods

Compliance

- c UL US LISTED
- Exceeds national electrical code.

295-1, 295

294-1, 294

296-1, 296

299

GORILLA-RING® 284

4" Round Ceiling Fan Pan – *Drawn with Conduit KOs*

Cat. #	Description	Cubic Inches (Cm3)	Knockouts			Recommended Max. Loads		Std. Pkg.	Bar Code
			Cable Priouts	Sides Conduit	Bottom Conduit	Ceiling Fan (Dynamic) Lbs.	Fixture (Static) Lbs.		
295-1	1/2" Depth	6.0 (99.2)	INSIDER	–	(5) 1/2"	70	150	10	–
295*	1/2" Depth	6.0 (99.2)	INSIDER	–	(5) 1/2"	70	150	10	IIIIIIII

4" Round Ceiling Box – *Drawn with Conduit KOs*

Cat. #	Description	Cubic Inches (Cm3)	Knockouts			Recommended Max. Loads		Std. Pkg.	Bar Code
			Cable Priouts	Sides Conduit	Bottom Conduit	Ceiling Fan (Dynamic) Lbs.	Fixture (Static) Lbs.		
294-1	2-1/8" Depth, Old and New Work	22.3 (365.4)	INSIDER	(2) 1/2"	(1) 1/2"	70	70/150**	10	–
294*	2-1/8" Depth, Old and New Work	22.3 (365.4)	INSIDER	(2) 1/2"	(1) 1/2"	70	70/150**	10	IIIIIIII
296-1	1-1/2" Depth	15.8 (258.9)	INSIDER	(2) 1/2"	(3) 1/2"	70	150	20	–
296*	1-1/2" Depth	15.8 (258.9)	INSIDER	(2) 1/2"	(3) 1/2"	70	150	8	IIIIIIII
299*	2-1/8" Depth	22.4 (367.1)	INSIDER	(2) 1/2"	(3) 1/2"	70	150	6	IIIIIIII

GORILLA-RING® – *Concrete Ring for Ceiling Fan Support*

Cat. #	Description	Cubic Inches (Cm3)	Knockouts			Recommended Max. Loads		Std. Pkg.	Bar Code
			Cable Priouts	Sides Conduit	Bottom Conduit	Ceiling Fan (Dynamic) Lbs.	Fixture (Static) Lbs.		
284	4" Deep, Double Row Side Knockouts	49.3 (807.9)	–	(4) 3/4" (6) 1/2"	–	70	150	6	–

*Notes: *Packaged in a stackable, individual chipboard display cartons. Sold in master carton quantities only.*
Hubbell® RACO® does not break carton quantities on these items.
4714, THE INSIDER® will secure non-metallic sheathed cable in 1/2" KO (see pg. B72).
*** New work applications rated at 150 lbs. Old work applications rated at 70 lbs.*

See end of section (Pg A88) for detailed drawings »

Ceiling Fan and Fixture Support Products

Applications

- RACO® KWIK-BRACE® is a heavy-duty ceiling fan brace designed for new or existing construction where joists are accessible
- RACO® RETRO-BRACE® is intended for installations of heavy lighting fixtures or ceiling paddle fans in old work or new work applications

Product Features

- KWIK-BRACE®
  - Slides apart to accommodate joist spacing from 16" to 24", screws provided
  - #10-32 ceiling fan screws provided and #8-32 ceiling fixture mounting provisions
  - Metal protection plate included
  - Nail spurs for easy brace positioning
  - Easy installation, up front ground screws
  - Easy to follow instructions and mounting hardware included
- RETRO-BRACE®
  - Adjustable for joist spacing from 16" to 24"
  - Simple "tool free" expansion
  - Easy installation, up front ground screw
  - #10-32 ceiling fan screws provided and #8-32 ceiling fixture mounting provisions
  - Easy to follow instructions and mounting hardware included

Compliance

- c UL US LISTED
- Exceeds national electrical code.

926, 926-1

NEW

929

936

937

939

KWIK-BRACE® with Box – *New Construction Braces for Lighting Fixtures or Ceiling Fans*

Cat. #	Description	Cubic Inches (CM3)	Knockouts			Recommended Max. Loads				Std. Pkg.	Bar Code
						Ceiling Fan (Dynamic) Lbs.		Fixture (Static) Lbs.			
			Cable Priouts	Sides Conduit	Bottom Conduit	16" Joist Span	24" Joist Span	16" Joist Span	24" Joist Span		
926-1	1-1/2" Depth	15.8 (258.9)	INSIDER	—	(2) 1/2"	70	70	210	90	12	IIIIIIII
929	2-1/8" Depth	22.5	—	(2) 1/2"	(2) 1/2"	70	70	210	90	6	IIIIIIII
926*	1-1/2" Depth	15.8 (258.9)	INSIDER	—	(2) 1/2"	70	70	210	90	6	IIIIIIII

RETRO-BRACE® with Box – *Remodeling Kits for Lighting Fixtures or Ceiling Fans*

936*	1-1/2" Depth	15.8 (258.9)	INSIDER	—	(2) 1/2"	70	35	110	50	6	IIIIIIII
937*	2-1/8" Depth	22.4 (367.1)	INSIDER	—	(2) 1/2"	70	35	110	50	4	IIIIIIII
939*	5/8" Depth	6.0 (98.4)	INSIDER	—	(2) 1/2"	70	35	110	50	6	IIIIIIII

*Notes: * Packaged in a stackable, individual chipboard display cartons. Sold in master carton quantities only. Hubbell® RACO® does not break carton quantities on these items. 4714, THE INSIDER® will secure non-metallic sheathed cable in 1/2" KO (See pg. B72).*

See end of section (Pg A89) for detailed drawings »

Ceiling Fan and Fixture Support Products

Applications

- GRID-BRACE™ ceiling support assembly is specifically designed for ceiling fan or fixture support for suspended ceilings

Product Features

- Heavy-duty GRID-BRACE™ for 24" spans
- Turnbuckle and 4' chain section provided
- Yoke provided for threaded rod installation
- Mount box anywhere on sliding bracket
- Spacers provided for decorative ceiling tiles that are below the depth of metal grid for flush mounting of box
- #10-32 grade 5, 1" ceiling fan screws included
- Easy to follow instructions included

Compliance

- UL LISTED

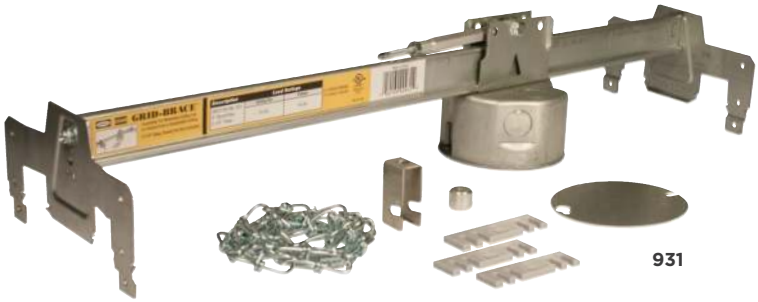

931

GRID-BRACE™ For Suspended Ceilings, 2-1/8" Deep

Cat. #	Description	Cubic Inches (CM³)	Knockouts		Recommended Max. Loads		Std. Pkg.	Bar Code
			Sides	Bottom Conduit	Ceiling Fan (Dynamic) Lbs.	Fixture (Static) Lbs.		
931	Ceiling Fan Support for Suspended Ceilings	22.3 (365.4)	(2) 1/2"	(2) Conc. 1/2" & 3/4"	70	70	4	IIIIIIII

Ceiling Pans

Applications

- RACO® Ceiling Pans are used in the installation of ceiling or wall lighting fixtures

Product Features

- Combination screw heads provide for faster installation

Compliance

- UL LISTED

292, 8292

287

293, 8293

Round Ceiling Pans

Cat. #	Description	Cubic Inches (Cm³)	Knockouts			Recommended Max. Loads		Std. Pkg.	Bar Code
			Cable Priouts	Sides Conduit	Bottom Conduit	Ceiling Fan (Dynamic) Lbs.	Fixture (Static) Lbs.		
3-1/2" – *Drawn with Non-Metallic Sheathed Cable Clamps*									
292	1/2" Depth	4.0 (65.5)	4	–	(1) 1/2"	No	50	50	–
8292	1/2" Depth	4.0 (65.5)	4	–	(1) 1/2"	No	50	25	IIIIIIII
287	3/4" Depth	5.0 (81.9)	4	–	(1) 1/2"	No	50	50	–
4" – *Drawn with Conduit KO's*									
293	1/2" Depth	6.0 (98.3)	–	–	(5) 1/2"	No	50	50	–
8293	1/2" Depth	6.0 (98.3)	–	–	(5) 1/2"	No	50	30	IIIIIIII

See end of section (Pg A89) for detailed drawings »

Ceiling Boxes and Covers

Round Old Work Pans

Old Work Bracket

Wall Obstruction

Perfect Solution!

Fitting not included

Applications

- Shallow old work pan design is ideal for mounting fixtures in existing walls or ceilings with obstructions that limit depth

Product Features

- Ideal pans for remodeling, two sizes
- Only 1/2" deep
- Flange and bracket mounts to 1/2" or 5/8" drywall without stud

Compliance

- c UL US LISTED

290

297

Round, Old Work Pans – *For Mounting Fixtures*

CAT. #	Description	Cubic Inches (CM^3)	Knockouts	STD. PKG.	Recommended Max. support loads (fixture)	Bar code
290	3-1/2" Old Work Pan Box	3.8 (63.0)	2, 1/2"	10	6 Lbs.	IIIIIIII
297	4" Old Work Pan Box	6.0 (98.4)	4, 1/2"	10	6 Lbs.	IIIIIIII

See end of section (Pg A89) for detailed drawings »

3-1/2" Octagon Boxes – Drawn

Applications

- RACO® Octagon Boxes are used in the installation of ceiling or wall lighting fixtures

Product Features

- Combination screw heads provide for faster installation
- Reference the Box Selection section in the front of this catalog for complete description of bracket types and features. Reference the Table on page A7 for cable ranges

Compliance

- UL LISTED

112

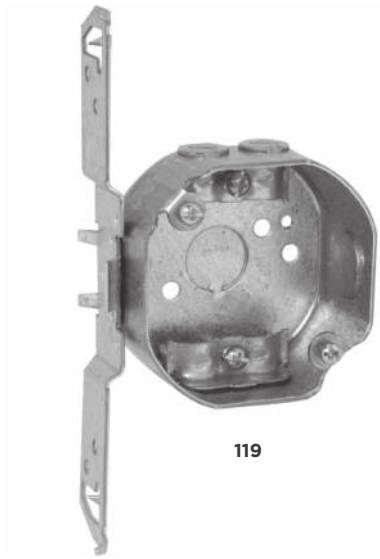

119

3-1/2" Octagon Box, 1-1/2" Deep – *Drawn with Non-Metallic Sheathed Cable Clamps*

Cat. #	Description	Cubic Inches (CM³)	Knockouts			Recommended Max. Loads		Std. Pkg.	Bar Code
			Cable Priouts	Sides Conduit	Bottom Conduit	Ceiling Fan (Dynamic) Lbs.	Fixture (Static) Lbs.		
112	—	11.8 (193.4)	4	(2) 1/2"	(1) 1/2"	No	50	25	IIIIIIII
119	TS Bracket, 1/2"	11.8 (193.4)	4	(1) 1/2"	(1) 1/2"	No	50	25	IIIIIIII

See end of section (Pg A90) for detailed drawings »

Ceiling Boxes and Covers

Applications

- RACO® Octagon Boxes are used in the installation of ceiling or wall lighting fixtures
- Extension rings provide a means for adding additional cubic capacity or as an outlet box for surface conduit

Product Features

- Combination screw heads provide for faster installation

Compliance

- UL LISTED

110

111

3-1/2" Octagon Box, 1-1/2" Deep – *Drawn with Conduit KOs*

Cat. #	Description	Cubic Inches (CM³)	Knockouts			Recommended Max. Loads		Std. Pkg.	Bar Code
			Cable Priouts	Sides Conduit	Bottom Conduit	Ceiling Fan (Dynamic) Lbs.	Fixture (Static) Lbs.		
110	—	11.8 (193.4)	—	(4) 1/2"	(1) 1/2"	No	50	25	IIIIIIII

3-1/2" Octagon Extension Ring, 1-1/2" Deep – *Drawn with Conduit KOs*

Cat. #	Description	Cubic Inches (CM³)	Knockouts			Recommended Max. Loads		Std. Pkg.	Bar Code
			Cable Priouts	Sides Conduit	Bottom Conduit	Ceiling Fan (Dynamic) Lbs.	Fixture (Static) Lbs.		
111	—	11.8 (193.4)	—	(4) 1/2"	—	No	—	25	IIIIIIII

See end of section (Pg A90) for detailed drawings »

4” Octagon Boxes and Extension Rings – Drawn with Conduit KOs

Applications

- RACO® Octagon Boxes are used in the installation of ceiling or wall lighting fixtures
- Extension rings provide a means for adding additional cubic capacity or as an outlet box for surface conduit

Product Features

- Combination screw heads provide for faster installation
- Reference the Box Selection section in the front of this catalog for complete description of bracket types and features
- Fixture bar hanger allows box to be located anywhere along length of bar

Compliance

- UL LISTED

125, 8125

126

127

324

161, 161SP

158

128

130

4” Octagon Box, 1-1/2” Deep – *Drawn with Conduit KOs*

Cat. #	Description	Cubic Inches (CM³)	Knockouts		Recommended Max. Loads		Std. Pkg.	Bar Code
			Sides Conduit	Bottom Conduit	Ceiling Fan (Dynamic) Lbs.	Fixture (Static) Lbs.		
125	—	15.5 (254.0)	(4) 1/2″	(5) 1/2″	No	50	50	—
8125	Raised Ground	15.5 (254.0)	(4) 1/2″	(4) 1/2″	No	50	30	IIIIIIII
126	Raised Ground	15.5 (254.0)	(4) 3/4″	(2) 1/2″, (2) 3/4″	No	50	50	IIIIIIII
127	Raised Ground	15.5 (254.0)	(2) 1/2″, (2) 3/4″	(2) 1/2″, (2) 3/4″	No	50	25	IIIIIIII
158	J Bracket, 3/8″ or 1/2″ Setback	15.5 (254.0)	(4) 1/2″	(5) 1/2″	No	50	25	IIIIIIII
161	TS Bracket, 1/2″ Setback	15.5 (254.0)	(3) 1/2″	(5) 1/2″	No	50	25	IIIIIIII
161SP	TS Bracket, 1/2″ Setback	15.5 (254.0)	(3) 1/2″	(5) 1/2″	No	50	12	IIIIIIII
324	Raised Ground, Box with 14-1/4″ to 22-1/2″ Bar Hanger	15.5 (254.0)	(4) 1/2″	(3) 1/2″	No	10*	25	IIIIIIII

Notes: 10 lbs max. load recommended. UL Rated for 50 lbs on 16” centers.

4″ Octagon Extension Rings, 1-1/2″ Deep – *Drawn with Conduit KOs*

Cat. #	Description	Cubic Inches (CM³)	Knockouts		Recommended Max. Loads		Std. Pkg.	Bar Code
			Sides Conduit	Bottom Conduit	Ceiling Fan (Dynamic) Lbs.	Fixture (Static) Lbs.		
128	—	15.5 (254.0)	(4) 1/2″	—	No	50	25	IIIIIIII
130	—	15.5 (254.0)	(2) 1/2″, (2) 3/4″	—	No	50	25	IIIIIIII

Notes: 10 lbs max. load recommended. UL Rated for 50 lbs on 16” centers.

See end of section (Pg A90) for detailed drawings »

4” Octagon Deep Boxes – Drawn with Conduit KOs

Applications

- RACO® Octagon Boxes are used in the installation of ceiling or wall lighting fixtures

Product Features

- Combination screw heads provide for faster installation
- Reference the Box Selection section in the front of this catalog for complete description of bracket types and features

Compliance

- UL LISTED

165

166

167

167TS

4” Octagon Box, 2-1/8” Deep – *Drawn with Conduit KOs*

Cat. #	Description	Cubic Inches (CM³)	Knockouts		Recommended Max. Loads		Std. Pkg.	Bar Code
			Sides Conduit	Bottom Conduit	Ceiling Fan (Dynamic) Lbs.	Fixture (Static) Lbs.		
165	—	21.5 (352.3)	(4) 1/2″	(5) 1/2″	No	50	50	—
166	—	21.5 (352.3)	(4) 3/4″	(3) 1/2″, (2) 3/4″	No	50	50	—
167	—	21.5 (352.3)	(2) 1/2″, (2) 3/4″	(3) 1/2″, (2) 3/4″	No	50	25	—
167TS	TS Bracket, 1/2″ Setback	21.5 (352.3)	(1) 1/2″, (2) 3/4″	(3) 1/2″, (2) 3/4″	No	50	25	—

See end of section (Pg A90) for detailed drawings »

4” Octagon Boxes – Drawn with Armored Cable / Metal Clad / Flex Clamps

Applications

- RACO® Octagon Boxes are used in the installation of ceiling or wall lighting fixtures

Product Features

- RACO® offers a variety of labor saving mounting brackets that allow for easy positioning of box along studs or joists
- Reference the Box Selection section in the front of this catalog for complete description of bracket types and features
- Fixture bar hanger allows box to be located anywhere along length of bar

Compliance

- UL LISTED

153

155

157

325, 8325

4” Octagon Box, 1-1/2” Deep – *Drawn with Armored Cable/Metal Clad/Flex Clamps*

Cat. #	Description	Cubic Inches (CM³)	Knockouts			Recommended Max. Loads		Std. Pkg.	Bar Code
			Cable Priouts	Sides Conduit	Bottom Conduit	Ceiling Fan (Dynamic) Lbs.	Fixture (Static) Lbs.		
153	—	15.5 (254.0)	4	(2) 1/2″	(1) 1/2″	No	50	25	IIIIIIII
155	TS Bracket, 1/2″ Setback	15.5 (254.0)	4	(1) 1/2″	(1) 1/2″	No	50	25	IIIIIIII
157	J Bracket, 3/8″ or 1/2″ Setback	15.5 (254.0)	4	(2) 1/2″	(1) 1/2″	No	50	25	IIIIIIII
325	Box with 14-1/4″ to 22-1/2″ bar hanger	15.5 (254.0)	4	(2) 1/2″	—	No	10*	25	—
8325	Box with 14-1/4″ to 22-1/2″ bar hanger	15.5 (254.0)	4	(2) 1/2″	—	No	10*	25	IIIIIIII

*Notes: * 10 lbs max. load recommended. UL Rated for 50 lbs on 16” centers.*

See end of section (Pg A90) for detailed drawings »

Ceiling Boxes and Covers

4” Octagon Boxes – Drawn with Non-Metallic Sheathed Cable Clamps

Applications

- RACO® Octagon Boxes are used in the installation of ceiling or wall lighting fixtures

Product Features

- RACO® offers a variety of labor saving mounting brackets that allow for easy positioning of box along studs or joists
- Reference the Box Selection section in the front of this catalog for complete description of bracket types and features
- Fixture bar hanger allows box to be located anywhere along length of bar
- Combination screw heads provide for faster installation

Compliance

- UL LISTED

146

145

150

164

326, 8326

160

175

177

176

4” Octagon Boxes

Cat. #	Description	Cubic Inches (CM³)	Knockouts			Recommended Max. Loads		Std. Pkg.	Bar Code
			Cable Priouts	Sides Conduit	Bottom Conduit	Ceiling Fan (Dynamic) Lbs.	Fixture (Static) Lbs.		
1-1/2” Deep – *Drawn with Non-Metallic Sheathed Cable Clamps*									
146	—	15.5 (254.0)	4	(2) 1/2″	(1) 1/2″	No	50	25	IIIIIIII
145	Side holes, 1/8″ and 1/4″	15.5 (254.0)	4	(2) 1/2″	(1) 1/2″	No	50	50	—
150	Plaster Ears	15.5 (254.0)	4	(2) 1/2″	(1) 1/2″	No	50	24	IIIIIIII
160	J Bracket, 3/8″ or 1/2″ Setback	15.5 (254.0)	4	(2) 1/2″	(1) 1/2″	No	50	25	IIIIIII
164	TS Bracket, 1/2″ Setback	15.5 (254.0)	4	(1) 1/2″	(1) 1/2″	No	50	25	IIIIIIII
326	Box with 14-1/4″ to 22-1/2″ bar hanger	15.5 (254.0)	4	(2) 1/2″	—	No	10*	25	—
8326	Box with 14-1/4″ to 22-1/2″ bar hanger	15.5 (254.0)	4	(2) 1/2″	—	No	10*	25	IIIIIIII
2-1/8″ Deep – *Drawn with Non-Metallic Sheathed Cable Clamps*									
175	—	21.5 (352.3)	4	(2) 1/2″	(1) 1/2″	No	50	25	IIIIIIII
176	J Bracket, 5/8″ Setback	21.5 (352.3)	4	(2) 1/2″	(1) 1/2″	No	50	25	IIIIIIII
177	TS Bracket, 1/2″ Setback	21.5 (352.3)	4	(1) 1/2″	(1) 1/2″	No	50	25	—

*Notes: * 10 lbs max. load recommended. UL Rated for 50 lbs on 16” centers.*

See end of section (Pg A90) for detailed drawings »

Round Covers for 3-1/2" and 4" Octagon Boxes

703

894KH

727, 732, 737

Applications

- Covers are used to close an outlet box
- Raised covers are used for mounting lighting fixtures

Product Features

- Combination screw heads provide for faster installation
- Swivel cover restricted to 20° swing from vertical
- KWIK-HANG® allows easy installation of high bay lighting fixtures. Fixture rests in position while wiring is completed

Compliance

- UL LISTED

Covers

Cat. #	Description	Cubic Inches (CM³)	Recommended Max. Loads		Std. Pkg.	Bar Code
			Ceiling Fan (Dynamic) Lbs.	Fixture (Static) Lbs.		
3-1/2" Round Cover						
703	Flat, 1/2" KO In Center	—	No	—	25	IIIIIIII
3-1/2" or 4" Swivel Fixture, Support Covers						
894KH	Kwik-Hang®, For 4" Octagon Boxes, 1/2" or 3/4" Conduit	—	No	50	25	IIIIIIII
4" Round Raised Cover						
737	Raised 1/2", Open, Ears 2-3/4" O.C.	3.3 (54.1)	No	50	25	IIIIIIII
727	Raised 5/8", Open, Ears 2-3/4" O.C.	3.8 (62.2)	No	50	25	IIIIIIII
732	Raised 1", Open, Ears 2-3/4" O.C.	6.5 (106.5)	No	50	25	—

Notes: 5 Bundles of 10 – sold in carton quantities only.

Ceiling Boxes and Covers

Octagon and Round Covers

722

724

725

729

731

5652-1

5653-1

5654-1

Applications

- Covers are used to close an outlet box
- Switches or receptacles may be installed into octagon boxes by using covers 729 or 731

Product Features

- 5” round covers feature state-of-the-art powder coat paint finish which provides a light texture finish and scratch resistance

Compliance

- UL LISTED

4” Octagon and Round Covers

Catalog #	Description	Pkg. Type	Std. Pkg.	Bar Code
722	Flat, blank	—	50	IIIIIIII
724	Flat, 1/2″ KO	—	25	IIIIIIII
725	Flat, 3/4″ KO	—	25	IIIIIIII
729	Flat, toggle switch	—	50	IIIIIIII
731	Flat, duplex receptacle	—	25	IIIIIIII

Notes: 5 Bundles of 10 – sold in carton quantities only.

5″ Round Steel Closure Plates

Catalog #	Description	Pkg. Type	Std. Pkg.	Bar Code
5652-1	Off-white, screw and universal mount strap	Shrink	10	—
5653-1	Off-white, (2) 8-32 screws, direct mount to fixture outlet box	Shrink	10	—
5654-1	Off-white, fixture stud and universal mount strap	Shrink	10	—

Notes: 5 Bundles of 10 – sold in carton quantities only.

Single Device Handy Boxes and Extension Rings

650, 8650, 650CSA

660, 8660

611

653

661, 661SP

662, 662SP

663, 8663

666

665

Applications

- RACO® Handy boxes, also called utility boxes, are used for convenience outlets, switch boxes or small junction boxes
- They are popular for exposed work applications (surface mounted wiring)
- The NEC requires that surface-mounted wiring be enclosed with a protective covering such as EMT conduit

Product Features

- Reference the Box Selection section in the front of this catalog for complete description of bracket types and features

Compliance

- UL LISTED
- All RACO UL listed steel boxes are acceptable for use in 2 hr. fire rated floor-ceiling and roof-ceiling assemblies, as well as 2 hr. fire rated bearing and non-bearing wood stud and steel stud walls.
  For additional information consult Fire Resistance Ratings ANSI/UL 263, Sec. III-6

See end of section (Pg A91) for detailed drawings »

4" x 2" Handy Boxes

Cat. #	Description	Cubic Inches (CM³)	Knockouts			Std. Pkg.	Bar Code
			Sides Conduit	Ends Conduit	Bottom Conduit		
1-1/2" Deep – *Welded with Conduit KOs*							
650	—	11.5 (188.5)	(6) 1/2"	(2) 1/2"	(3) 1/2"	50	—
8650	—	11.5 (188.5)	(6) 1/2"	(2) 1/2"	(3) 1/2"	25	IIIIIIII
650CSA	With Ground Screw Driven	11.5 (188.5)	(6) 1/2"	(2) 1/2"	(3) 1/2"	50	—
Extension Rings, 1-1/2" Deep – *Welded with Conduit KOs*							
653	—	11.5 (188.5)	(6) 1/2"	(2) 1/2"	—	25	IIIIIIII
1-7/8" Deep – *Drawn with Conduit KOs*							
660	Raised Ground	13.0 (213.0)	(6) 1/2"	(2) 1/2"	(2) 1/2"	50	—
8660	Raised Ground	13.0 (213.0)	(6) 1/2"	(2) 1/2"	(2) 1/2"	50	IIIIIIII
611	Raised Ground, With Ground Screw Driven	13.0 (213.0)	(6) 1/2"	(2) 1/2"	(2) 1/2"	50	—
661	Raised Ground, A Bracket, 5/8" Setback	13.0 (213.0)	(3) 1/2"	(2) 1/2"	(3) 1/2"	25	IIIIIIII
661SP	Raised Ground, A B racket, 5/8" Setback	13.0 (213.0)	(3) 1/2"	(2) 1/2"	(3) 1/2"	18	IIIIIIII
662	Raised Ground, TS Bracket, 1/2" Setback	13.0 (213.0)	(3) 1/2"	(2) 1/2"	(3) 1/2"	25	IIIIIIII
662SP	Raised Ground, TS Bracket, 1/2" Setback	13.0 (213.0)	(3) 1/2"	(2) 1/2"	(3) 1/2"	18	IIIIIIII
663	Raised Ground	13.0 (213.0)	(4) 3/4"	(2) 3/4"	(1) 3/4"	50	—
8663	Raised Ground, 1-7/8" Depth (inside),	13.0 (213.0)	(4) 3/4"	(2) 3/4"	(1) 3/4"	25	IIIIIIII
666	Raised Ground	13.0 (213.0)	(6) 1/2"	(1) 1/2" (1) 3/4"	—	50	—
Extension Rings, 1-7/8" Deep – *Drawn with Conduit KOs*							
665	—	13.0 (213.0)	(6) 1/2"	(2) 1/2"	—	20	IIIIIIII

Handy Boxes

Single Device Handy Boxes and Covers

670RAC, 8670

670RACRD

674

678

671

640

880

860

861

862

865

864

863

867

Applications

- RACO® Handy boxes, also called utility boxes, are used for convenience outlets, switch boxes or small junction boxes
- They are popular for exposed work applications (surface mounted wiring)
- The NEC requires that surface-mounted wiring be enclosed with a protective covering such as EMT conduit
- RACO® Handy Box covers are used to close a Handy Box
- Covers also may be used as single gang wall plates

Product Features

- Reference the Box Selection section in the front of this catalog for complete description of bracket types and features
- RACO® Handy Box covers are designed to match the contours of the box
- Cover corners are rounded
- All covers have captive screws

Compliance

- UL LISTED
- All RACO UL listed steel boxes are acceptable for use in 2 hr. fire rated floor-ceiling and roof-ceiling assemblies, as well as 2 hr. fire rated bearing and non-bearing wood stud and steel stud walls.
  For additional information consult Fire Resistance Ratings ANSI/UL 263, Sec. III-6

See end of section (Pg A91) for detailed drawings »

Handy Boxes

Cat. #	Description	Cubic Inches (CM^3)	Knockouts			Std. Pkg.	Bar Code
			Sides Conduit	Ends Conduit	Bottom Conduit		
4" x 2" Handy Boxes, 2-1/8" Deep – *Welded with Conduit KOs*							
670RAC	–	16.5 (270.4)	(6) 1/2"	(2) 1/2"	(3) 1/2"	50	–
670RACRD	Color Red	16.5 (270.4)	(6) 1/2"	(2) 1/2"	(3) 1/2"	50	–
8670	–	16.5 (270.4)	(6) 1/2"	(2) 1/2"	(3) 1/2"	25	IIIIIIII
674	–	16.5 (270.4)	(4) 3/4"	(2) 3/4"	(2) 3/4"	50	IIIIIIII
678	TS Bracket, 1/2" Setback	16.5 (270.4)	(3) 1/2"	(2) 1/2"	(3) 1/2"	25	IIIIIIII
671	A Bracket, 5/8" Setback	16.5 (270.4)	(3) 1/2"	(2) 1/2"	(3) 1/2"	50	IIIIIIII
3-3/4" x 1-9/16" Industrial Handy Box and Cover – *Drawn with Conduit KOs*							
640	1-1/2" Depth	7.3 (119.6)	(6) 1/2"	(2) 1/2"	(3) 1/2"	50	–
880	Blank Cover with Captive Screws	–	–	–	–	50	–

4" x 2" Handy Box Covers – *2-5/16" Wide x 4-3/16" Length*

Catalog #	Description	Std. Pkg.	Bar Code
860	Blank	25	IIIIIIII
861	1/2" KO, Centered	25	IIIIIIII
862	GFCI	25	IIIIIIII
865	Toggle Switch	25	IIIIIIII
864	Duplex Receptacle	25	IIIIIIII
863	Single Receptacle, 1.406" Dia.	25	IIIIIIII
867	20A Receptacle, 1.594" Dia.	25	IIIIIIII

Two Device Handy / Switch Boxes and Covers

Applications

- Installers can save time and cut installation costs with two gang switch boxes
- Larger capacity boxes are ideal for today's designs where there is a need to install two devices at one location
- Drawn boxes are ideal for exposed work applications (surface mounted wiring)

Product Features

- 681, 685 bracketed boxes are set back 1/2" eliminating the need for a plaster ring
- Reference the Box Selection section in the front of this catalog for complete description of bracket and clamp types and features
- 871, 872 and 873 covers are unpainted and manufactured from pre-galvanized steel

Compliance

- UL LISTED
- All RACO UL listed steel boxes are acceptable for use in 2 hr. fire rated floor-ceiling and roof-ceiling assemblies, as well as 2 hr. fire rated bearing and non-bearing wood stud and steel stud walls.
  For additional information consult Fire Resistance Ratings ANSI/UL 263, Sec. III-6

680

681, 681SP

683, 683SP

685, 685SP

871

872

873

4" Square Two Devices Boxes and Plates

Cat. #	Description	Cubic Inches (CM³)	Knockouts		Std. Pkg.	Bar Code
			Sides Conduit	Bottom Conduit		
Switch Boxes, 2-1/8" Deep – *Drawn with Conduit KOs*						
680	—	30.3 (496.5)	(12) 1/2"	(5) 1/2"	25	IIIIIIII
683	—	30.3 (496.5)	(8) 1/2", (4) 3/4"	(3) 1/2", (2) 3/4"	25	IIIIIIII
683SP	—	30.3 (496.5)	(8) 1/2", (4) 3/4"	(3) 1/2", (2) 3/4"	10	IIIIIIII
681	TS Bracket, 1/2" Setback	30.3 (496.5)	(9) 1/2"	(5) 1/2"	25	IIIIIIII
681SP	TS Bracket, 1/2" Setback	30.3 (496.5)	(9) 1/2"	(5) 1/2"	8	IIIIIIII
685	TS Bracket, 1/2" Setback	30.3 (496.5)	(6) 3/4"	(3) 1/2", (2) 3/4"	25	IIIIIIII
685SP	TS Bracket, 1/2" Setback	30.3 (496.5)	(6) 3/4"	(3) 1/2", (2) 3/4"	8	IIIIIIII
Wall Plates						
871	2 Toggle Switches, 1/4" Raised from Surface	—	—	—	25	IIIIIIII
872	1 Duplex and 1 Toggle Switch, 1/4" Raised from Surface	—	—	—	25	IIIIIIII
873	2 Duplex Receptacles, 1/4" Raised from Surface	—	—	—	25	IIIIIIII

See end of section (Pg A91) for detailed drawings »

Switch Boxes

3" X 2" Switch Boxes – With Conduit KOs

Applications

- RACO® Switch boxes are used to house wiring devices such as switches or outlets

Product Features

- Reference the Box Selection section in the front of this catalog for complete description of bracket types and features
- Gangable switch boxes offer the option of constructing a box to hold two or more devices
- Plaster ears allow box to be used in "old work" applications

Compliance

- UL LISTED
- All RACO UL listed steel boxes are acceptable for use in 2 hr. fire rated floor-ceiling and roof-ceiling assemblies, as well as 2 hr. fire rated bearing and non-bearing wood stud and steel stud walls.
  For additional information consult Fire Resistance Ratings ANSI/UL 263, Sec. III-6

400

420

500, 8500

501

503

502

504, 8504

506

509

508

Switch Boxes

Cat. #	Description	Cubic Inches (CM³)	Knockouts				Std. Pkg.	Bar Code
			Sides Conduit	Ends Cable	Ends Conduit	Bottom Conduit		
1-1/2" Deep – *Gangable with Conduit KOs*								
400	Plaster Ears	7.5 (122.9)	—	—	(2) 1/2"	(1) 1/2"	20	IIIIIIII
2" Deep – *Gangable with Conduit KOs*								
420	Plaster Ears	10.0 (163.9)	(4) 1/2"	—	(2) 1/2"	(2) 1/2"	20	IIIIIIII
2-1/2" Deep – *Gangable with Conduit KOs*								
500	Plaster Ears	12.5 (204.8)	(4) 1/2"	—	(2) 1/2"	(2) 1/2"	50	—
8500	Plaster Ears	12.5 (204.8)	(4) 1/2"	—	(2) 1/2"	(2) 1/2"	25	IIIIIIII
501	No Plaster Ears	12.5 (204.8)	(4) 1/2"	—	(2) 1/2"	(2) 1/2"	50	—
503	Plaster Ears	12.5 (204.8)	(4) 1/2"	—	(2) 3/4"	(2) 1/2"	50	—
502	B Bracket, 5/8" Setback	12.5 (204.8)	(4) 1/2"	—	(2) 1/2"	(2) 1/2"	10	IIIIIIII
504	TS Bracket, 1/2" Setback	12.5 (204.8)	(2) 1/2"	—	(2) 1/2"	(2) 1/2"	50	—
8504	TS Bracket, 1/2" Setback	12.5 (204.8)	(2) 1/2"	—	(2) 1/2"	(2) 1/2"	20	IIIIIIII
506	Old Work TIGERGRIP®, Plaster Ears	12.5 (204.8)	—	—	(2) 1/2"	(2) 1/2"	16	IIIIIIII
509	Old Work, Plaster Ears	12.5 (204.8)	—	—	(2) 1/2"	(2) 1/2"	20	IIIIIIII
2-1/2" Deep – *Nongangable with Conduit KOs*								
508	Old Work, 3/4" Sheet Rock Max., Plaster Ears	12.5 (204.8)	—	—	(2) 1/2"	—	20	IIIIIIII

See end of section (Pg A92) for detailed drawings »

3" X 2" Switch Boxes – With Conduit KOs

Applications

- RACO® Switch boxes are used to house wiring devices such as switches or outlets

Product Features

- Reference the Box Selection section in the front of this catalog for complete description of bracket types and features
- Gangable switch boxes offer the option of constructing a box to hold two or more devices
- Plaster ears allow box to be used in "old work" applications

Compliance

- UL LISTED
- All RACO UL listed steel boxes are acceptable for use in 2 hr. fire rated floor-ceiling and roof-ceiling assemblies, as well as 2 hr. fire rated bearing and non-bearing wood stud and steel stud walls.
  For additional information consult Fire Resistance Ratings ANSI/UL 263, Sec. III-6

560

565

562

590, 8590

591

592

Switch Boxes

Cat. #	Description	Cubic Inches (Cm3)	Knockouts				Std. Pkg.	Bar Code
			Sides Conduit	Ends Cable	Ends Conduit	Bottom Conduit		
2-3/4" Deep – *Nongangable with Conduit KOs*								
560	Plaster Ears	14.0 (229.4)	(4) 1/2"	—	(2) 1/2"	(2) 1/2"	25	IIIIIIII
565	Plaster Ears	14.0 (229.4)	(4) 3/4"	—	(2) 3/4"	(2) 1/2"	50	—
562	TS Bracket, 1/2" Setback	14.0 (229.4)	(2) 1/2"	—	(2) 1/2"	(2) 1/2"	50	—
3-1/2" Deep – *Gangable with Conduit KOs*								
590	Plaster Ears	18.0 (295.0)	(4) 1/2"	—	(4) 1/2"	(1) 1/2"	50	—
8590	Plaster Ears	18.0 (295.0)	(4) 1/2"	—	(4) 1/2"	(1) 1/2"	25	IIIIIIII
591	Plaster Ears	18.0 (295.0)	(4) 3/4"	—	(4) 3/4"	(1) 1/2"	50	IIIIIIII
592	No Plaster Ears	18.0 (295.0)	(4) 1/2"	—	(4) 1/2"	(1) 1/2"	50	—

See end of section (Pg A92) for detailed drawings »

3" X 2" Switch Boxes – With Armored Cable / Metal Clad / Flex Clamps

Applications

- RACO® Switch boxes are used to house wiring devices such as switches or outlets

Product Features

- Gangable switch boxes offer the option of constructing a box to hold two or more devices
- Plaster ears allow box to be used in "old work" applications
- Reference the Box Selection section in the front of this catalog for complete description of clamp types and features

Compliance

- UL LISTED
- All RACO UL listed steel boxes are acceptable for use in 2 hr. fire rated floor-ceiling and roof-ceiling assemblies, as well as 2 hr. fire rated bearing and non-bearing wood stud and steel stud walls.
  For additional information consult Fire Resistance Ratings ANSI/UL 263, Sec. III-6

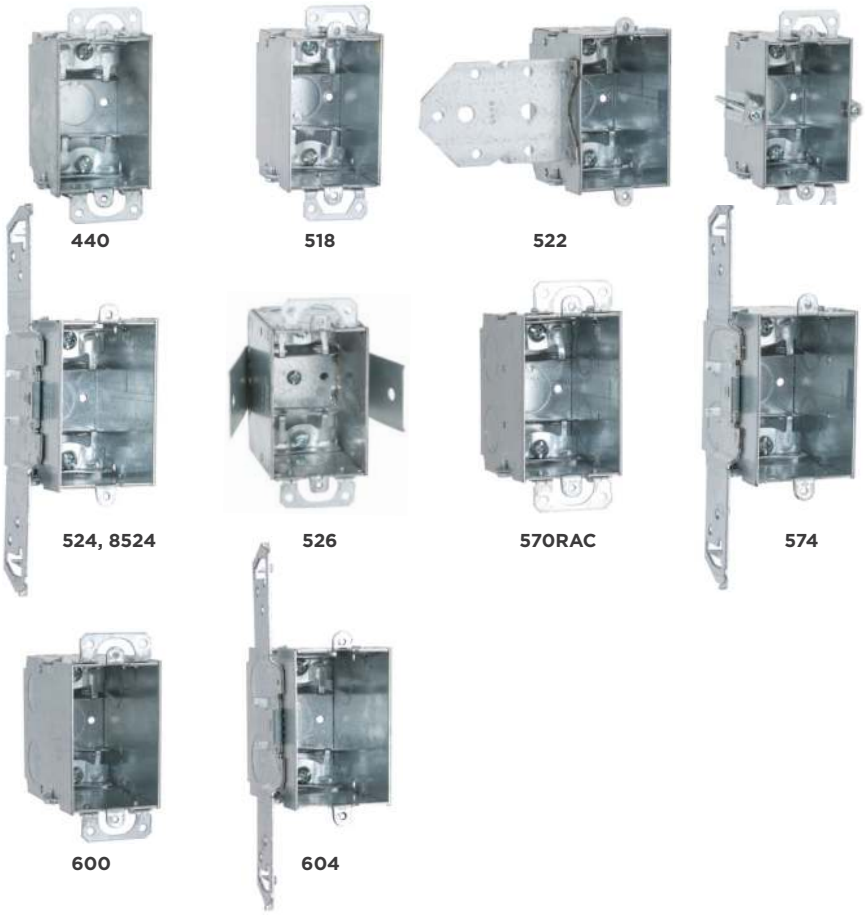

Switch Boxes

Cat. #	Description	Cubic Inches (CM^3)	Knockouts				Std. Pkg.	Bar Code
			Sides Conduit	Ends Cable	Ends Conduit	Bottom Conduit		
2" Deep Switch Box – *Gangable with Armored Cable/Metal Clad/Flex Clamps*								
440	Plaster Ears	10.0 (163.9)	—	4	—	(1) 1/2"	50	—
2-1/2" Deep – *Gangable with Armored Cable/Metal Clad/Flex Clamps*								
518	Plaster Ears	12.5 (204.8)	—	4	—	(1) 1/2"	25	IIIIIIII
524	TS Bracket, 1/2" Setback	12.5 (204.8)	—	4	(2) 1/2"	(1) 1/2"	50	—
8524	TS Bracket, 1/2" Setback	12.5 (204.8)	—	4	(2) 1/2"	(1) 1/2"	25	IIIIIIII
522	LB Bracket, 5/8" Setback	12.5 (204.8)	—	4	(2) 1/2"	(1) 1/2"	25	IIIIIIII
523	Plaster Ears, Old Work, GRIPTITE®	12.5 (204.8)	—	4	—	(1) 1/2"	25	IIIIIIII
2-1/2" Deep – *Nongangable with Armored Cable/Metal Clad/Flex Clamps*								
526	Plaster Ears, Old Work, 3/4" Sheet Rock Max.	12.5 (204.8)	—	4	—	—	20	IIIIIIII
2-3/4" Deep – *Gangable with Armored Cable/Metal Clad/Flex Clamps*								
570RAC	2-3/4" Depth, Plaster Ears	14.0 (229.4)	(4) 1/2"	4	(2) 1/2"	(1) 1/2"	50	—
574	2-3/4" Depth, TS Bracket, 1/2" Setback	14.0 (229.4)	(2) 1/2"	4	(2) 1/2"	(1) 1/2"	25	IIIIIIII
3-1/2" Deep – *Gangable with Armored Cable/Metal Clad/Flex Clamps*								
600	Plaster Ears	18.0 (295.0)	(4) 1/2"	4	(2) 1/2"	(1) 1/2"	25	—
604	TS Bracket, 1/2" Setback	18.0 (295.0)	(4) 1/2"	4	(2) 1/2"	(1) 1/2"	25	IIIIIIII

See end of section (Pg A92) for detailed drawings »

3” X 2” Stab-IT® Switch Boxes – With Armored Cable / Metal Clad / Flex Clamps

Applications

- For any job where flexible armored cable is being used.

Product Features

- Designed for quick installation of flex, MC, MCI, MCI-A, AC, and HCF Cable
- Accepts cable sizes from 14/2 up to 10/3 for most cable types
- Available in 4” sq. 2-1/8” deep boxes with 1 or 2 Stab-IT connectors
- Each Stab-IT connector accommodates two cables
- Pre-installed 8” solid #12 pigtail for faster installation

Compliance

- UL LISTED
- All RACO UL listed steel boxes are acceptable for use in 2 hr. fire rated floor-ceiling and roof-ceiling assemblies, as well as 2 hr. fire rated bearing and non-bearing wood stud and steel stud walls.
  For additional information consult Fire Resistance Ratings ANSI/UL 263, Sec. III-6

518S

623S

Switch Box Stab-IT Connector

Cat. #	Description	Cubic Inches (CM³)	Knockouts				Std. Pkg.	Bar Code
			Sides Conduit	Ends Cable	Ends Conduit	Bottom Conduit		
2-1/2” Deep								
518S	(1) Stab-IT Connector, Pigtail	12.5 (204.8)	—	—	—	(1) 1/2”	25	IIIIIIII
3-1/2” Deep								
623S	(1) Stab-IT Connector, Old Work Clips, Pigtail	18.0 (295.0)	—	—	—	(1) 1/2”	25	IIIIIIII

See end of section (Pg A92) for detailed drawings »

3" X 2" Switch Boxes – With Non-Metallic Sheathed Cable Clamps

Applications

- RACO® Switch boxes are used to house wiring devices such as switches or outlets

Product Features

- Beveled corner boxes are designed to prevent the clamp screws from protruding into back wall
- Reference the Box Selection section in the front of this catalog for complete description of bracket types and features
- Gangable switch boxes offer the option of constructing a box to hold two or more devices
- Plaster ears allow box to be used in "old work" applications

Compliance

- UL LISTED
- All RACO UL listed steel boxes are acceptable for use in 2 hr. fire rated floor-ceiling and roof-ceiling assemblies, as well as 2 hr. fire rated bearing and non-bearing wood stud and steel stud walls.
  For additional information consult Fire Resistance Ratings ANSI/UL 263, Sec. III-6

410

445

471

473

487

519

528

529

545

517

531

512

Switch Boxes

Cat. #	Description	Cubic Inches (CM³)	Knockouts: Sides Conduit	Knockouts: Ends Cable	Knockouts: Ends Conduit	Knockouts: Bottom Conduit	Std. Pkg.	Bar Code
1-1/2" Deep – *Nongangable with Non-Metallic Sheathed Cable Clamps*								
410	Plaster Ears	7.5 (122.9)	—	4	—	—	25	IIIIIIII
2" Deep – *Gangable with Non-Metallic Sheathed Cable Clamps*								
445	Plaster Ears	10.0 (163.9)	—	4	—	(1) 1/2"	50	—
2-1/4" Deep – *Gangable with Non-Metallic Sheathed Cable Clamps*								
471	One Screw, Plaster Ears	10.5 (172.1)	—	4	—	(1) 1/2"	25	IIIIIIII
473	Level Bumps	10.5 (172.1)	—	4	(2) 1/2"	(1) 1/2"	20	IIIIIIII
487	Old Work, TIGERGRIP®	10.5 (172.1)	—	4	—	(1) 1/2"	20	IIIIIIII
2-1/2" Deep – *Nongangable with Non-Metallic Sheathed Cable Clamps*								
545	Plaster Ears, Old Work, 3/4" Sheet Rock Max.	12.5 (204.8)	—	4	(2) 1/2"	—	20	IIIIIIII
2-1/2" Deep – *Gangable with Non-Metallic Sheathed Cable Clamps*								
519	Plaster Ears	12.5 (204.8)	—	4	—	(1) 1/2"	25	IIIIIIII
528	Level Bumps	12.5 (204.8)	—	4	(2) 1/2"	(1) 1/2"	25	IIIIIIII
529	LB Bracket, 5/8" Setback	12.5 (204.8)	—	4	(2) 1/2"	(1) 1/2"	20	IIIIIIII
531	TS Bracket, 1/2" Setback	12.5 (204.8)	—	4	(2) 1/2"	(1) 1/2"	25	IIIIIIII
517	Plaster Ears, Old Work, TIGERGRIP®	12.5 (204.8)	—	4	—	(1) 1/2"	20	IIIIIIII
512	Plaster Ears, Old Work	12.5 (204.8)	—	4	—	(1) 1/2"	20	IIIIIIII

See end of section (Pg A92) for detailed drawings »

3" X 2" Switch Boxes – With Non-Metallic Sheathed Cable Clamps

Applications

- RACO® Switch boxes are used to house wiring devices such as switches or outlets

Product Features

- RACO® 355 and 8355 are extra wide for ease of GFCI installation
- Reference the Box Selection section in the front of this catalog for complete description of bracket types and features
- Gangable switch boxes offer the option of constructing a box to hold two or more devices
- Plaster ears allow box to be used in "old work" applications

Compliance

- UL LISTED
- All RACO UL listed steel boxes are acceptable for use in 2 hr. fire rated floor-ceiling and roof-ceiling assemblies, as well as 2 hr. fire rated bearing and non-bearing wood stud and steel stud walls.
  For additional information consult Fire Resistance Ratings ANSI/UL 263, Sec. III-6

564

567

355, 8355

601, 8601

603

605

Switch Boxes

Cat. #	Description	Cubic Inches (CM^3)	Knockouts				Std. Pkg.	Bar Code
			Sides Conduit	Ends Cable	Ends Conduit	Bottom Conduit		
2-3/4" Deep – *Gangable with Non-Metallic Sheathed Cable Clamps*								
567	Plaster Ears	14.0 (229.4)	(4) 1/2"	4	(2) 1/2"	(1) 1/2"	25	IIIIIIII
564	TS Bracket, 1/2" Setback	14.0 (229.4)	(2) 1/2"	4	(2) 1/2"	(1) 1/2"	25	IIIIIIII
2-27/32" Deep – *Nongangable with Non-Metallic Sheathed Cable Clamps*								
355	S Bracket, Nails	15.8 (258.9)	—	4	—	(1) 1/2"	50	—
8355	S Bracket, Nails	15.8 (258.9)	—	4	—	(1) 1/2"	20	IIIIIIII
3-1/2" Deep – *Gangable with Non-Metallic Sheathed Cable Clamps*								
601	Plaster Ears	18.0 (295.0)	(4) 1/2"	4	(2) 1/2"	(1) 1/2"	25	—
8601	Plaster Ears	18.0 (295.0)	(4) 1/2"	4	(2) 1/2"	(1) 1/2"	25	IIIIIIII
605	TS Bracket, 1/2" Setback	18.0 (295.0)	(4) 1/2"	4	(2) 1/2"	(1) 1/2"	25	IIIIIIII
603	B Bracket, 5/8" Setback	18.0 (295.0)	(4) 1/2"	4	(2) 1/2"	(1) 1/2"	25	—

See end of section (Pg A92) for detailed drawings »

Switch Boxes

Shallow Switch Boxes – With Non-Metallic Sheathed Cable Clamps

Applications

- RACO® Shallow switch boxes are made for use with furring strips and 1/4" paneling
- Switch boxes are used to house wiring devices such as switches or outlets

Product Features

- RACO® "D" bracket is pre-scored and can be broken off if needed
- Reference the Box Selection section in the front of this catalog for complete description of bracket types and features
- 418 will accept 4" square mudring or flat cover

Compliance

- UL LISTED
- All RACO UL listed steel boxes are acceptable for use in 2 hr. fire rated floor-ceiling and roof-ceiling assemblies, as well as 2 hr. fire rated bearing and non-bearing wood stud and steel stud walls. For additional information consult Fire Resistance Ratings ANSI/UL 263, Sec. III-6

404, 404SP

405

418

Switch Boxes

Cat. #	Description	Cubic Inches (CM³)	Knockouts				Std. Pkg.	Bar Code
			Sides Conduit	Ends Cable	Ends Conduit	Bottom Conduit		
3-3/4" x 2" Switch Box, 1" Deep – *Nongangable with Non-Metallic Sheathed Cable Clamps*								
404	Q Clamp, 1/4" Setback	6.5 (106.5)	—	2	(1) 1/2"	—	25	IIIIIIII
404SP	Q Clamp, 1/4" Setback	6.5 (106.5)	—	2	(1) 1/2"	—	6	IIIIIIII
405	Q Clamp, 1/4" Setback	6.5 (106.5)	—	4	—	—	25	IIIIIIII
4" x 4" Switch Box, 1" Deep – *Nongangable with Non-Metallic Sheathed Cable Clamps*								
418	(2) Q Clamp, 1/4" Setback	14.8 (242.5)	—	4	(2) 1/2"	—	25	IIIIIIII

Multidevice Large Capacity Switch Boxes & Partitions

Applications

- Installers can save time and cut installation costs with multigang switch boxes
- Larger capacity boxes are ideal for today's designs where there is a need to install two devices at one location

Product Features

- Reference the Box Selection section in the front of this catalog for complete description of bracket and clamp types and features

Compliance

- UL LISTED

686

687

971

Multidevice Switch Boxes, 2-1/2" Deep – *Welded with Conduit KOs*

Cat. #	Description	Cubic Inches (CM³)	Knockouts				Std. Pkg.	Bar Code
			Sides Conduit	Ends Cable	Ends Conduit	Bottom Conduit		
686	3-Gang, 1/2" Setback	47.8 (783.3)	(6) 1/2", (6) 3/4"	—	(2) 1/2", (2) 3/4"	(3) 1/2", (3) 3/4"	10	IIIIIIII
687	4-Gang, 1/2" Setback	63.5 (1040.6)	(8) 1/2", (8) 3/4"	—	(2) 1/2", (2) 3/4"	(4) 1/2", (4) 3/4"	10	IIIIIIII

Low-Voltage Partition

Cat. #	Description	Cubic Inches (CM³)	Knockouts				Std. Pkg.	Bar Code
			Sides Conduit	Ends Cable	Ends Conduit	Bottom Conduit		
971	For 686 and 687 Boxes	—	—	—	—	—	25	—

See end of section (Pg A92) for detailed drawings »

Multigang Boxes

951 through 955

941 through 945

Applications

- RACO® Gang boxes are used where a number of wiring devices are to be centrally located

Product Features

- Gang boxes save time in installation, no need to gang boxes together
- Have 3/4" and 1" concentric KO's for use with a wide variety of wiring methods
- Bottom KO pattern, 3-1/2" and 2-3/4" at either end of box
- Accept two styles of covers, flat and 3/4" raised device cover
- Use low voltage partitions #974 or #949

Compliance

- UL LISTED

Gang Boxes

Cat. #	Description	Cubic Inches (CM^3)	Knockouts			Std. Pkg.	Bar Code
			Top & Bottom	Sides	Back		
1-5/8" Deep – *Welded with Conduit KOs*							
951	2-Gang	47.0 (770.1)	8 Conc. 1/2" & 3/4"	4 Conc. 1/2" & 3/4"	(3) 1/2" (2) 3/4"	5	—
952	3-Gang	60.0 (983.2)	10 Conc. 1/2" & 3/4"	4 Conc. 1/2" & 3/4"	(6) 1/2" (4) 3/4"	5	—
953	4-Gang	72.8 (1192.9)	12 Conc. 1/2" & 3/4"	4 Conc. 1/2" & 3/4"	(6) 1/2" (4) 3/4"	5	—
954	5-Gang	85.8 (1406.0)	14 Conc. 1/2" & 3/4"	4 Conc. 1/2" & 3/4"	(6) 1/2" (4) 3/4"	5	—
955	6-Gang	98.5 (1614.1)	16 Conc. 1/2" & 3/4"	4 Conc. 1/2" & 3/4"	(6) 1/2" (4) 3/4"	1	—
2-1/2" Deep – *Welded with Conduit KOs*							
941	2-Gang	70.0 (1147.0)	(4) 3/4" 4 Conc. 3/4" & 1"	4 Conc. 3/4" & 1"	(3) 1/2" (2) 3/4"	5	—
942	3-Gang	90.0 (1474.8)	(8) 3/4" 2 Conc. 3/4" & 1"	4 Conc. 3/4" & 1"	(6) 1/2" (4) 3/4"	5	—
943	4-Gang	110.0 (1802.5)	(4) 3/4" 4 Conc. 3/4" & 1"	4 Conc. 3/4" & 1"	(6) 1/2" (4) 3/4"	5	—
944	5-Gang	130.0 (2130.3)	(6) 3/4" 4 Conc. 3/4" & 1"	4 Conc. 3/4" & 1"	(6) 1/2" (4) 3/4"	5	—
945	6-Gang	150.0 (2458.0)	(6) 3/4" 6 Conc. 3/4" & 1"	4 Conc. 3/4" & 1"	(6) 1/2" (4) 3/4"	1	—

See end of section (Pg A92) for detailed drawings »

Covers and Partitions

821

822

823

824

825

828

834, 836

974

949

Applications

- RACO® Gang box covers permit the mounting of devices
- Low voltage partitions may be added to boxes to divide power from voice/data
- RACO® 834 and 836 covers are ideal for nurse call stations

Product Features

- RACO® Device covers also fit next smaller box, i.e. three gang cover fits two or three gang box
- Partition divides boxes into compartments

Compliance

- UL LISTED
  (Cat. #974 and #949 not UL Listed)

Covers and Partitions

Cat. #	Description	For Gang Boxes	Cu. In. Capacity (CM^3)	Std. Pkg.	Bar Code
Device Covers for Gang Boxes- *Raised 3/4"*					
821	2-Gang, 7-1/16" Width	951 or 941	10.0 (163.8)	5	—
822	3-Gang, 8-7/8" Width	952 or 942	15.3 (250.7)	5	IIIIIIII
823	4-Gang, 10-11/16" Width	953 or 943	20.3 (332.6)	5	IIIIIIII
824	5-Gang, 12-1/2" Width	954 or 944	25.5 (417.8)	5	—
825	6-Gang, 14-5/16" Width	955 or 945	30.5 (499.8)	1	—
828	9-Gang, 19-3/4" Width	958	45.8 (750.5)	1	—
Device Covers for Gang Boxes					
834	3-Gang, 8-7/8" Width, 2" Raised	952 or 942	40.8 (668.5)	15	—
836	3-Gang, 8-7/8" Width. 1-1/2" Raised	952 or 942	30.6 (501.4)	20	—
Low Voltage Partitions for Gang Boxes					
974	For 1-5/8" Deep	—	—	25	—
949	For 2-1/2" Deep	—	—	25	—

Multigang Boxes

Blank Covers

844

845

846

847

848

Applications

- Covers are used to close a multigang box

Flat, Blank Covers for Gang Boxes

Cat. #	Description	For Gang Boxes	Std. Pkg.	Bar Code
844	2-Gang, 7-1/16″ Width	951 or 941	5	—
845	3-Gang, 8-7/8″ Width	952 or 942	5	—
846	4-Gang, 10-11/16″ Width	953 or 943	5	—
847	5-Gang, 12-1/2″ Width	954 or 944	1	—
848	6-Gang, 14-5/16″ Width	955 or 945	1	—

Concrete Rings, Ceiling Box and Cover Plates

270RAC

271

272

277

273

278

274, 279

280

918

275

276

284 GORILLA-RING®

890

892

893

Applications

- RACO® Concrete rings are used with poured deck (floor) in high-rise construction
- These boxes are installed on wooden or steel concrete forms. After the forms are removed, the box is flush with the concrete
- *RACO® Ceiling Fan Concrete Ring 284 is listed for support of ceiling fans

Product Features

- Flat sides provide excellent contact for locknuts
- External ears are used to nail the ring to the wood form
- Top cover is removable for before-pour work
- Ears on inside of box are for fixtures
- Waxed fixture ears prevent concrete from interfering with the threads
- A variety of cover plates are available
- Cover plate must be ordered separately with all RACO® concrete rings

Compliance

- UL LISTED

Concrete Rings

Cat. #	Description	Cubic Inches (CM^3)	Knockouts	Recommended Max. Loads		Std. Pkg.	Bar Code
				Ceiling Fan (Dynamic) Lbs.	Fixture (Static) Lbs.		
270RAC	2" Deep	24.5 (401.4)	Single Row KOs - 1/2" and 3/4"	No	50	25	–
271	2-1/2" Deep	30.8 (504.7)	Single Row KOs - 1/2" and 3/4"	No	50	25	IIIIIIIII
272	3" Deep	37.0 (606.3)	Single Row KOs - 1/2" and 3/4"	No	50	25	–
277	3" Deep	37.0 (606.3)	Single Row KOs - 3/4" and 1"	No	50	25	–
273	3-1/2" Deep	43.0 (704.6)	Double Row KOs - 1/2" and 3/4"	No	50	20	–
278	3-1/2" Deep	43.0 (704.6)	Single Row KOs - 3/4" and 1"	No	50	20	–
274	4" Deep	49.3 (807.8)	Double Row KOs - 1/2" and 3/4"	No	50	20	–
279	4" Deep	49.3 (807.8)	Double Row KOs - 3/4" and 1"	No	50	20	–
275	5" Deep	61.5 (1007.8)	Double Row KOs - 1/2" and 3/4"	No	50	10	–
276	6" Deep	74.0 (1212.6)	Double Row KOs - 1/2" and 3/4"	No	50	10	–
284*	4" Deep	49.3 (807.8)	Double Row KOs - 1/2" and 3/4"	70	150	6	–

Hung Ceiling Box

280	3-1/2" Deep, includes an 890 cover	43.0 (704.6)	Double Row KOs (8) 1/2" and (8) 3/4"	No	–	20	–
918	30" Long Bars for Hung Ceiling Box	–	–	No	–	40	–

Concrete Ring - *Back Plates/Covers and Adapter Ring*

Cat. #	Description	Std. Pkg.	Barcode
890	(3) 1/2" and (2) 3/4" KO's, O.D. 4-1/2"	25	IIIIIIIII
892	Flat, Blank, O.D. 4-1/2"	25	–
893	O.D. 4-1/2", Joins Octagon Ext. Ring to Concrete Ring, Two Retained Screws	50	–

See end of section (Pg A93) for detailed drawings »

Masonry Boxes

Masonry Boxes and Partitions

690 through 694

695 through 699

960

965

971

949

Applications

- RACO® Masonry boxes are designed to accommodate the mounting of switches or other devices in masonry walls
- Gangable masonry boxes offer the option of constructing a box to hold two or more devices
- 2-1/2" deep boxes are used in 4" block walls, 3-1/2" deep boxes are used in 6" or 8" block walls

Nongangable Product Features

- Rugged welded design does not fall apart during construction
- Available from one to six gang configurations in both 2-1/2" and 3-1/2" depths
- Rectangular shape fits square cuts in block
- Large volume design allows for additional work room inside the box
- Standard 1/2" and 3/4" concentric Knockouts
- Device ears inside the box prevent mortar from getting in the device holes
- Steel low voltage partition #971 fits all 2-1/2" or 3-1/2" depths
- Standard wall plates can be used

Compliance

- UL LISTED

See end of section (Pg A93) for detailed drawings »

Masonry Boxes

Cat. #	Description	Cubic Inches (CM³)	Knockouts			Std. Pkg.	Bar Code
			Sides Conduit	Ends Conduit	Bottom Conduit		
2-1/2" Deep – *Nongangable with conduit KOs*							
690	1-gang, 1-31/32" wide	16.0 (262.1)	4 Conc.	2 Conc.	2 Conc.	25	—
691	2-gang, 3-25/32" wide	31.8 (521.1)	4 Conc.	4 Conc.	4 Conc.	25	—
692	3-gang, 5-19/32" wide	47.8 (783.3)	4 Conc.	6 Conc.	3 Conc.	10	—
693	4-gang, 7-13/32" wide	63.5 (1040.5)	4 Conc.	8 Conc.	4 Conc.	10	—
694	5-gang, 9-7/32" wide	79.5 (1302.7)	4 Conc.	10 Conc.	5 Conc.	10	—
960	6-gang, 11-1/32" wide	95.3 (1561.6)	4 Conc.	12 Conc.	6 Conc.	1	—
3-1/2" Deep – *Nongangable with conduit KOs*							
695	1-gang, 1-31/32" wide	22.5 (368.7)	4 Conc.	4 Conc.	2 Conc.	25	—
8695	1-gang, 1-31/32" wide	22.5 (368.7)	4 Conc.	4 Conc.	2 Conc.	25	IIIIIIII
696	2-gang, 3-25/32" wide	45.0 (737.4)	4 Conc.	8 Conc.	4 Conc.	25	IIIIIIII
697	3-gang, 5-19/32" wide	67.3 (1102.8)	4 Conc.	12 Conc.	3 Conc.	10	IIIIIIII
698	4-gang, 7-13/32" wide	89.8 (1471.5)	4 Conc.	16 Conc.	4 Conc.	10	—
699	5-gang, 9-7/32" wide	112.3 (1840.2)	4 Conc.	20 Conc.	5 Conc.	10	—
965	6-gang, 11-1/32" wide	134.8 (2208.9)	4 Conc.	24 Conc.	6 Conc.	1	—

Low Voltage Partitions for Masonry Boxes

Catalog #	Description	Std. Pkg.	Bar Code
971	For nongangable, 2-1/2" or 3-1/2" deep boxes	25	—
949	For gangable, 2-1/2" deep boxes	25	IIIIIIII

Gangable Masonry Boxes and Partitions

688

689

675

676

Applications

- RACO® Masonry boxes are designed to accommodate the mounting of switches or other devices in masonry walls
- Gangable masonry boxes offer the option of constructing a box to hold two or more devices
- 2-1/2" deep boxes are used in 4" block walls, 3-1/2" deep boxes are used in 6" or 8" block walls

Gangable Product Features

- Rugged welded design does not fall apart during construction
- Gangable design allows installer to build unlimited number of gangs to hold multiple devices
- Rectangular shape fits square cuts in block
- Standard 1/2" and 3/4" TKO® Knockouts
- Device ears inside the box prevent mortar from getting in the device holes
- Steel low voltage partitions:
  #675 fits 2-1/2" box
  #676 fits 3-1/2" deep box
- Forward mounted grounding provision allows for easy installation of grounding pigtail
- Standard wall plates can be used

Compliance

- UL LISTED

Masonry Boxes

Cat. #	Description	Cubic Inches (CM^3)	Knockouts			Std. Pkg.	Bar Code
			Sides Conduit	Ends Conduit	Bottom Conduit		
2-1/2" Deep – *Gangable with conduit KOs*							
688	1-gang, 1-15/16" wide	15.5 (253.9)	4 TKO®	2 TKO®	2 TKO®	20	IIIIIIII
3-1/2" Deep – *Gangable with conduit KOs*							
689	1-gang, 1-15/16" wide	22.5 (368.7)	4 TKO®	4 TKO®	2 TKO®	20	IIIIIIII

Low Voltage Partitions for Masonry Boxes

Catalog #	Description	Std. Pkg.	Bar Code
675	For gangable, 2-1/2" deep boxes	20	IIIIIIII
676	For gangable, 3-1/2" deep boxes	20	IIIIIIII

Masonry Boxes

Block-Loc™ Masonry Boxes

689B

695B

696B

697B

698B

786B

796B

899B

Block-Loc™ Applications

- For power and data outlets in masonry block walls

Block-Loc™ Features

- Integral brackets securely hold power and data outlets to concrete block from front and back in masonry block walls
- Quick and accurate positioning
- Break off front tabs

Compliance

- UL LISTED

Block-Loc Masonry Boxes

Catalog #	Description	Cubic Inches (CM^3)	Knockouts			Std. Pkg.	Bar Code
			Sides Conduit	Ends Conduit	Bottom Conduit		
689B	3-1/2″ deep 1-gang, gangable	22.5 (368.7)	4 TKO®	2 TKO®	2 TKO®	18	IIIIIIII
695B	3-1/2″ deep 1-gang, welded	22.5 (368.7)	4 Conc.	4 Conc.	2 Conc.	18	IIIIIIII
696B	3-1/2″ deep 2-gang, welded	45.0 (737.4)	4 Conc.	8 Conc.	4 Conc.	12	IIIIIIII
697B	3-1/2″ deep 3-gang, welded	67.3 (1102.8)	4 Conc.	12 Conc.	3 Conc.	12	IIIIIIII
698B	3-1/2″ deep 4-gang, welded	89.8 (1471.6)	4 Conc.	16 Conc.	4 Conc.	6	IIIIIIII
786B	4″ Sq. 1-gang tile cover, 2″ deep	14.5 (237.6)	—	—	—	25	IIIIIIII
796B	4″ Sq. 2-gang tile cover, 2″ deep	20.5 (335.9)	—	—	—	20	IIIIIIII
899B	4-11/16″ Sq. 1-gang tile cover, 2″ deep	16.0 (262.2)	—	—	—	12	IIIIIIII

Braces and Brackets - Between Studs

Applications
9004R - 9006R, 9015R

- RACO® Braces and extenders are used for metal or wood stud box positioning

Product Features

- Available for 1-1/2" or 2-1/8" deep boxes
- Locator dimples on face of bar allows for exact positioning of single or multiple boxes
- Dimple feature provides quick start of screws, and reinforcement to prevent box mounting screws from stripping out when box is mounted
- Design of adjustable brace allows ground screw to clear when box is mounted
- Boxes attach easily with self-tapping screws

Compliance

- c UL us LISTED

Applications - 9001, 9002

- Positions electrical boxes, plaster rings and low voltage devices between studs

Product Features

- Fold-back stabilizer leg prevents bracket from being pushed back in wall cavity during drywall installation
- Designed for 2-1/2" or 3-1/2" studs.
- Mounts 4" or 4-11/16" sq. boxes
- Box can be mounted on ring without raised cover to save time by providing maximum work area inside box
- When mounted, raised cover is brought to within 1/16" of drywall every time and will not bulge or break out drywall

Compliance

- c UL us LISTED

9015R

9004R, 9006R

9001

9002

Mounting Braces and Brackets

Catalog #	Description	Std. Pkg.	Bar Code
Non-Adjustable Box Mounting Brace – For 4" and 4-11/16" Square Box			
9004R	For 16" stud spacing, 1-1/2" or 2-1/8" deep box	50	—
9006R	For 24" stud spacing, 1-1/2" or 2-1/8" deep box	50	—
Adjustable Box Mounting Brace – *For 4" and 4-11/16" square box*			
9015R	Adjusts from 15" to 26", 1-1/2" or 2-1/8" deep box	50	—
Fixed Position Box Mounting Brackets – *For 4" and 4-11/16" square box*			
9001	(3) Box, for 16" O. C. studs	50	—
9002	(4) Box, for 24" O. C. studs	50	—

Box Support Products

Open Center Brackets

Applications

- Perfect for commercial construction. Can be adjusted for use on stud spacing anywhere from 16-24". Accommodates 4" or 4-11/16" square boxes and plaster rings. Provides maximum flexibility for installers while reducing required SKUs on the jobsite

Product Features

- Accepts 4" and 4-11/16" square boxes
- Large opening allows multiple boxes to mount anywhere in the space
- Rigid design eliminates need for far-side support
- Adjusts from 16" to 24"
- Can be cut for use in smaller spacing
- Centering marks for quick installation
- Use on wood or metal studs
- Galvanized steel construction

Compliance

- c UL US LISTED

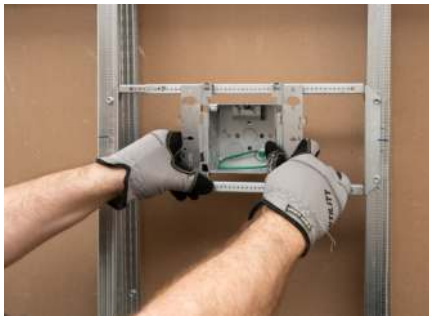

9020R

9030G

Adjustable Box Support Bracket

Catalog #	Description	Std. Pkg.	Bar Code
9020R	Adjustable Open Center Bracket for 16" to 24" stud spacing	25	—
9030G	Accepts Only The Universal Stud Mount Brackets And The Ultimate G Series Brackets.	25	—

Applications

- Easily position and adjust electrical boxes and plaster rings between studs

Product Features

- Accepts both 4" and 4-11/16" square boxes and plaster rings
- Opening gives installer flexibility of box position between studs
- Features built-in first means of support for securing and supporting flex and armored cable
- Built-in ruler to aid in alignment of electrical box

Compliance

- c UL US LISTED

9024R

9016R

Box Support Brackets

Catalog #	Description	Std. Pkg.	Bar Code
9016R	Bracket for 16" stud spacing	25	—
9024R	Bracket for 24" stud spacing	25	—

Brackets and Box Supports - On Studs

Applications - 9018

- Supports electrical box when mounted to a stud

Product Features

- Dual-point mounting, right or left of stud Perfect for prefab applications
- Mounts 4" or 4-11/16" sq. box to 2-1/2", 3-1/2" or 6" studs

Compliance

- UL LISTED

Applications - SBRNRRAC

- Bracket supports electrical box when mounted to a stud

Product Features

- Patented, built-in cable support accepts up to 3 MC cables (12-2 MC to 10-4 MC)
- Mounts 4" sq. box left or right of stud
- Patented flip-out support accommodates wood and metal stud depths: 2-1/2", 3-1/2", 3-5/8", 5-1/2" and 6"

Compliance

- c UL US LISTED

Applications - 980 BOX-LOC® & 978 *(Sold Separately)*

- Allows any 4" or 4-11/16" square metal box to be affixed to a metal stud quickly and easily. 978 Far Side Support prevents box from being pushed back in wall cavity

Product Features

- 980 Patented spring-steel design installs in seconds without tools
- 978 simply snaps into hole in back of box and is easily cut to fit wall cavity

Applications - SP2RAC

- Spanner bar SP2RAC works for 24" spans, works with both SBRNRRAC and S1CRAC bracket systems to provide support between two metal or wood studs
- Bars can be used in many mechanical support applications

Product Features

- 1" high profile, 1/8" mounting holes, 1" O.C.
- Heavy 20 gauge .038" gauge pre-galvanized steel construction for secure and rigid support of boxes in wall cavity

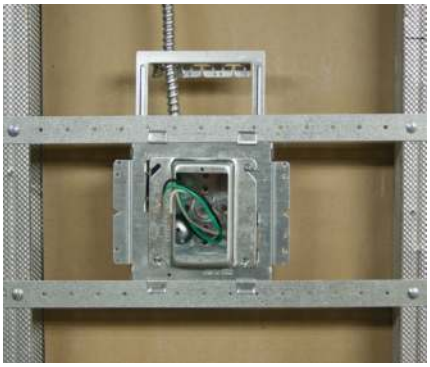

SBRNRRAC

9018

BOX-LOC® 980

978

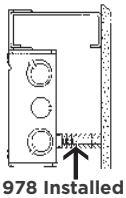

978 Installed

SP2RAC

987

Brackets and Box Supports

Catalog #	Description	Std. Pkg.	Bar Code
Two-Point Box Mounting Brackets			
9018	Left or right side stud mount	100	—
Single Box Mounting Bracket With Cable Support – *For MC/BX Wiring Systems*			
SBRNRRAC	Positions a 4" Sq. junction box between two studs	30	—
Box-Loc Metal Stud Clip			
980	Spring steel bracket	50	IIIIIIII
Plastic Far Side Support			
978	1-7/8" rigid, plastic support	50	—
Between Stud Spanner Bar			
SP2RAC	Spans 24" between two metal or wood studs	30	—
Bracket Support			
987	Heavy duty universal bracket support	25	—

Box Support Products

Box and Cable Supports - Between Studs and Floor

Applications - 9009, 9010

- Supports electrical boxes from floor or concrete forms

Product Features

- Fold back stabilizer prevents bracket from being pushed back in wall cavity during drywall installation
- Designed for mounting square boxes 12" or 18" above floor. Mounts to metal or wood plate.
- Mounts 4" or 4-11/16" square boxes
- Box can be mounted on support without drywall ring to save time by providing maximum working area in box
- When mounted, raised cover is brought to within 1/16" of drywall every time. Will not bulge or break out drywall

Compliance

- UL LISTED

9009

9010

CS1RAC

Applications - CS1RAC & CS2RAC

- CS1RAC and CS2RAC are used to organize runs of MC or BX cables with spacing for NEC requirements that eliminate the need for derating
- Flexibility allows for multiple mounting applications

Product Features

- Cable holders can be mounted in multiple configurations - wall/surface, hung by 1/4" all threaded rod, top of wall mounted or deck mounted
- Easy to use, integrated locking tabs hold cable securely in place - snap cable in, no additional hardware required to hold cables in place
- Cable holders accept cable ranges 12-2 MC to 10-4 MC
- Heavy 20 gauge .038" gauge pre-galvanized steel construction for secure and rigid support of boxes in wall cavity

Compliance

- UL LISTED

Floor Mounted Box Support

Catalog #	Description	Std. Pkg.	Bar Code
9009	12" Tall bracket	25	—
9010	18" Tall bracket	25	—

MC/BX Cable Holder

Catalog #	Description	Std. Pkg.	Bar Code
CS1RAC	16" -10 Cable positions	50	—

Box Supports - Ceiling

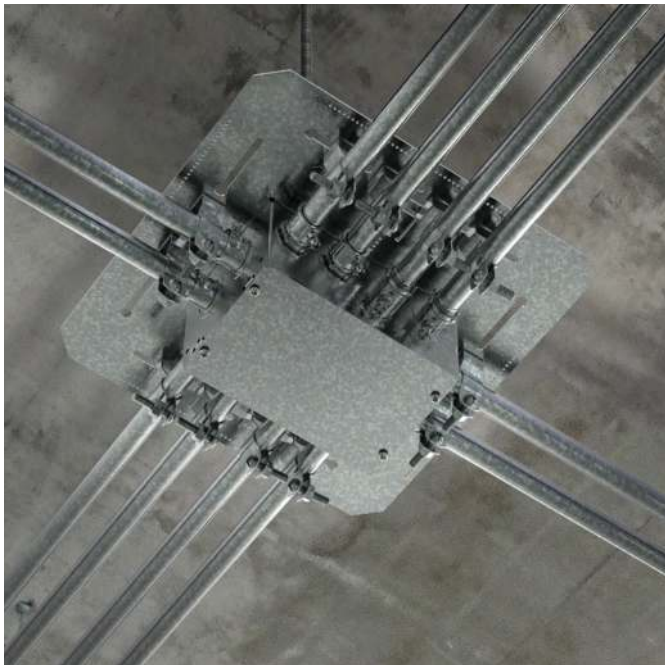

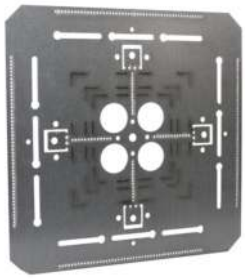

9112R

9112RL

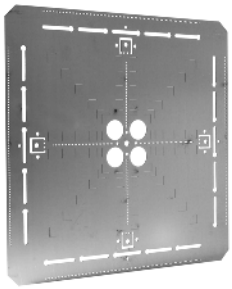

9118R

Applications

- RACO® box support and conduit positioning plates offer flexible options for quickly hanging electrical boxes in commercial or industrial overhead applications. Also provides a means of positioning for conduit exiting the box. Create a clean, organized and strong installation that saves time and materials compared to traditional suspended procedures.

  Two 12" models accommodate up to 6" x 6" boxes. Larger 18" model can hold multiple 4" square boxes, or larger boxes up to 12" x 12", including our Grand Slam junction box.

Product Features

- Mount horizontally or vertically from a single 3/8" threaded rod
- Bendable tabs secure plate in vertical installation
- Multiple markings for easier box alignment
- Pre-punched holes for rear raceway access
- Holes and slots provide limitless options for clamp or strap installation
- Lanced feature on 9112RL for easier one-hole strap installation
- Constructed of 16 gauge galvanized steel

Compliance

- c UL us LISTED

12" x 12" Square Box & Conduit Hangers

Catalog #	Description	Std. Pkg.	Bar Code
9112R	Flat plate, 16 gauge galvanized steel	10	—
9112RL	Lanced plate, 16 gauge galvanized steel	10	—

18" x 18" Square Box & Conduit Hangers

Catalog #	Description	Std. Pkg.	Bar Code
9118R	Flat plate, 16 gauge galvanized steel	5	—

Accessories for Steel Boxes

Box Supports - Ceiling

Applications - 920, 922

- RACO® Adjustable bar hanger allows box to be placed between ceiling joists or wall studs quickly and easily

Product Features

- Both RACO® 920 and 922 bar fixture hangers allow box to be located anywhere along length of bar
- 920, 922 Clip installs in 1/2" knockout located in bottom (back) of box
- RACO® box must be ordered separately

Box Installation

- Bar hangers attach to octagon or square boxes through center 1/2" knockouts
- Remove knockout from box, also the screw and fixture clip from bar hanger
- When box is located accurately between joists, tighten the screw securely

KWIK-HANG™ Applications

- Designed to support 4" square, 4-11/16" square, round, or octagon boxes in hanging applications
- Uses existing holes in bottom of box for quick installation

KWIK-HANG™ Features

- Use with cable, wire, chain, strut (not included) to secure from building structure
- Quick installation
- Locks securely into position
- Durable steel construction
- Installation instructions included

Compliances

- cULus Listed for static fixtures load of 50 lbs or less
- Satisfies NEC 300.11 for box support
- c UL us LISTED for static fixtures load of 50 lbs or less

920, 922

991

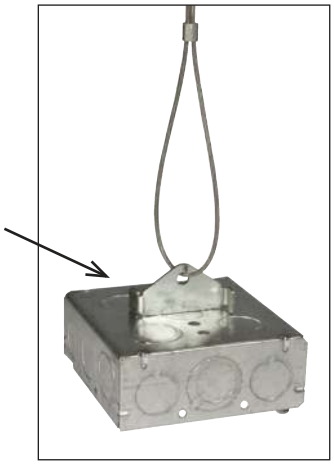

Adjustable Bar Hangers

Catalog #	Description	Recommended Max. Loads		Std. Pkg.	Bar Code
		Ceiling Fan (Dynamic) Lbs.	Fixture (Static) Lbs.		
920	Clip, adjusts 14-1/4" to 22-1/2"	No	10**	25	IIIIIIII
922	Clip, adjusts 14-1/4" to 22-1/2"	No	10**	50	—

Box Support Products

Catalog #	Description	Std. Pkg.	Bar Code
991	KWIK-HANG™ Box Support Hanger	50	—

Accessories for Steel Boxes

"Old Work Saddle" Application - 970RAC

- The "Old Work Saddle" 907RAC is designed to be used with 2-1/2" deep switch boxes that have plaster ears

"Old Work Saddle" Product Features

- 970RAC installs into the 1/2" bottom conduit knockout

Grip-Lok® Application 977, 8977, 8977-5

- The GRIP-LOK support is designed to be used with any deep switch box that has plaster ears

Grip-Lok® Product Feature

- Simply slip GRIP-LOK between box and wall, then bend tabs into the box

Application - 9008, 9017

- Mounts standard low voltage wall plates, old work (existing walls)

Product Features

- For use on low voltage Class 2 circuits only where electrical boxes are not required
- Can be used to mount telephone jacks, computer outlets, security/sound systems, television antennas, etc.
- Fast, precise mounting of low voltage wall plates to walls or studs

Compliances

- c UL us LISTED

Add-A-Depth Applications - 976

- Add-A-Depth ring or "goof ring" is designed to act as a barrier between combustible wall surfaces and the wiring system
- For single and two-gang device boxes
- There is no UL standard for this product
- Subject to acceptance by an electric inspector

NEC Code 314.20

- See page A(3) 2017 Standards

Compliances

- c UL us LISTED

Application - 969

- Old work box support clips convert standard switch box to old work type

Product Features

- Old work switch box clips for use with 1/2" thick standard drywall

970RAC

977, 8977, 8977-5

969

9017

976

999

987

961

962

Accessories

Catalog #	Description	Std. Pkg.	Bar Code
Switch Box Support "Old Work Saddle"			
970RAC	Mounts switch boxes w/ plaster ears in hollow walls or ceilings	10	IIIIIIII
Grip-Lok® "Old Work" Switch Box Support			
977	Supplied as a pair to mount switch box with plaster ears in a hollow wall, 1-7/8" long legs	100 pairs	—
8977	Supplied as a pair to mount switch box with plaster ears in a hollow wall, 1-7/8" long legs	25 pairs	IIIIIIII
8977-5*	Supplied as a pair to mount switch box with plaster ears in a hollow wall, 1-7/8" long legs	100 pairs	IIIIIIII
Old Work Switch Box Clips			
969	Old Work clips for switch boxes, 1/2" sheetrock	50 pairs	IIIIIIII
Low Voltage Mounting Bracket			
9017	New or Old Work 1-gang	20 Bags**	IIIIIIII
Add-A-Depth Ring			
976	Adjustment range 1/4" - 1", two 1-1/8" screws included	25 Bags	IIIIIIII
Device Leveling Plate			
999	FLUSH-FIT device leveler	50	—
Box Support			
987	Heavy duty Universal Box Support (UBS)	25	IIIIIIII

*Notes: *4 Bundles of 25 – sold in carton quantities only.*
***2 Brackets per polybag.*

Switch Box Support "Old Work Saddle"

Cat. #	Description	For RACO® Switch Boxes	Std. Pkg.	Bar Code
961	Plaster ears - open style with screws	410, 420, 440, 445, 500, 503, 506, 508, 526, 545, 560, 565, 567, 570RAC, 590, 600, 601	100	IIIIIIII
962	Plaster ears - clipped style with screws	150, 400, 591	100	IIIIIIII

Protector Plates

Cable Protector Plates

Puzzle-Plate® Cable Protectors Application - 2712 – 2713R

- Protects non-metallic sheathed cable or raceway type wires running through wood studs from accidental nail, screw, or drill penetration. Also applies to plumbing to protect non-metallic piping

Puzzle-Plate® Product Features

- Innovative, interlocking design does not allow nail or screw penetration through gaps or holes
- Pre-galvanized steel construction for added corrosion protection
- No additional hardware required, just position and hammer down spurs
- Unique interlocking feature allows installer to easily increase area that requires protection

Compliances

- c UL US LISTED (not 2712, 2712-9, 2713)

Nailing Spur Applications - 2709, 2710

- Protects non-metallic sheathed cable or raceway type wires running through wood members from accidental nail, screw or drill penetration
- No nails required

Product Features

- Old work

Compliances

- c UL US LISTED

Application - 701AJT - 701FG

- RACO® protector plates eliminate drywall compound, debris, paint and drywall router bit from entering box or damaging device or conductors

Product Features

- Raised - covers protect Decora, duplex and switch devices
- Flat - covers close off mudring opening to protect wiring from drywaller's router bit tools
- Feature patented wire retrieval loop to hold data wire in place

2712, 2712R, 2712-9R, 2713R Puzzle-Plates®

2709, 2709-9, 2710 Standard Type

701AJT

702AJT

701FG

701RD

701FD

Cable Protector Plates - *For Wood Studs*

Cat. #	Contractor Pack	Description	Length	Material Thickness	Std. Pkg.	Bar Code
2712	—	Puzzle-Plate / Gangable	2-3/4″	.0510″	100	IIIIIIII
2712-9R	Yes	Puzzle-Plate / Gangable	2-3/4″	.0625″	50	—
2712R	—	Puzzle-Plate / Gangable	2-3/4″	.0625″	100	IIIIIIII
2713R	—	Puzzle-Plate / Gangable	5″	.0625″	50	IIIIIIII
2709	—	Standard Type / Nongangable	2-9/16″	.0625″	100	IIIIIIII
2709-9	Yes	Standard Type / Nongangable	2-9/16″	.0625″	100	—
2710	—	Standard Type / Nongangable	2-9/16″	.0625″	200	—

Raised or Flat Device & Wire Protection Plates

Cat. #	Description	Device Protect	Std. Pkg.
701AJT	3/4″ raised, for 1 device adjustable mudring	GFI, Duplex, Switch	24
702AJT	3/4″ raised, for 2 device adjustable mudring	GFI, Duplex, Switch	24
701RD	Gangable for RACO 686, 687, & RACO nongangable masonry boxes	For Caddy® MP1S	24
701FD	3/4″ raised, low voltage	For Caddy® MP1S	50
701FG	Flat, gangable for 686, 687, RACO gang masonry boxes	Opening and Wires	100

Box Grounding Products

982, 994 #14 Wire, 996, 8996-1, 8983-1, 983 #12 Wire

984

992 #14 Wire 993 #12 Wire

998, 8998-1

973, 8973-1

975, 8975-1

Grounding Applications

- RACO® Grounding accessories provide a safe electrical path to ground to help prevent shock
- RACO® Grounding screws thread into the box and provide a means of fastening the ground conductor
- Ground wires fasten to the box and are then connected to wiring system or wiring device
- RACO® 6" and 8" ground pigtails feature 4-way (slotted, phillips, hex-head) combo 10-32 captive screw
- Ground clips provide a quick method of fastening a ground conductor to the edge of a steel outlet box
- Ground clips are designed for use with solid No. 14, 12, and 10 gauge copper conductor or No. 12 and 10 gauge aluminum conductor
- Only one solid ground wire to be installed per ground clip

Grounding Pigtails

CAT.# Wire 6"	CAT.# Length 8"	Description	Std. Pkg.	Bar Code
982	**994**	#14 Solid insulated copper wire, captive 4-way combo head green dye finish ground screw one end (25 pc. bundles)	1000	—
983	**996**	#12 Solid insulated copper wire, captive 4-way combo head green dye finish ground screw one end (25 pc. bundles)	1000	—
8983-1	**8996-1**	#12 Solid insulated copper wire, captive 4-way combo head green dye finish ground screw one end, poly bag (10 pc. per bag)	40 Bags*	IIIIIIII
984		#14 Solid bare copper wire, captive 4-way combo head green dye finish ground screw one end (25 bundles)	1000	—
992		#14 Stranded insulated copper wire, captive 4-way combo head green dye finish ground screw one end, spade terminal one end (100 pc. bundles)	500	—
993		#12 Stranded insulated copper wire, captive 4-way combo head green dye finish ground screw one end, spade terminal one end (100 pc. bundles)	500	—

Grounding Screws and Clips

Cat. #	Description	Std. Pkg.	Bar Code
998	4-Way combo head green dye finish 3/8" ground screw for 10-32 tapped hole, clam shell packaged (100 pc. Per clam shell)	1000	IIIIIIII
8998-1	4-Way combo head green dye finish 3/8" ground screw for 10-32 tapped hole, poly bag (10 pc. Per bag)	50 Bags*	IIIIIIII
973	Slotted head green dye finish 3/8" ground screw for 10-32 tapped hole, clam shell package (100 pc. Per clam shell)	1000	IIIIIIII
8973-1	Slotted head green dye finish 3/8" ground screw for 10-32 tapped hole, poly bag (10 pc. Per bag)	50 Bags*	IIIIIIII
975	Green dye finish ground clip for #14-#10 AWG copper, clam shell package (100 pc. Per clam shell)	1000	IIIIIIII
8975-1	Green dye finish ground clip for #14-#10 AWG copper, poly bag (10 pc. Per bag)	50 Bags*	IIIIIIII

*Notes: *Order standard package bag quantifies only, not per piece.*

Detailed Drawings

Square Boxes

4" Square Conduit Boxes

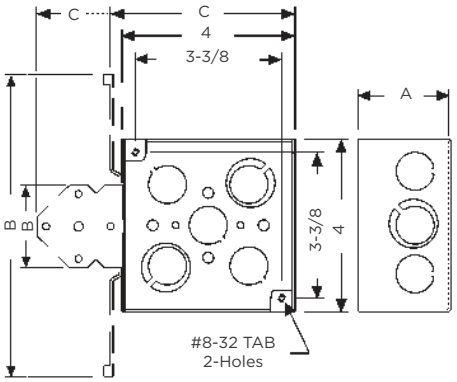

Cat. #	Dimensions		
	A (Inside)	B	C
181	1-1/2"	-	-
185	1-1/4"	-	-
187	1-1/2"	-	-
199	1-1/2"	6-7/8"	4-3/8"
202	1-1/2"	-	-
204	1-1/2"	-	-
207	2-1/8"	-	-
226	1-1/2"	-	-
227	1-1/2"	4-5/8"	5-1/2"
236	2-1/8"	7-5/8"	4-3/8"
237	2-1/8"	7-5/8"	4-3/8"
238	2-1/8"	4-5/8"	5-1/2"
239	2-1/8"	-	-
251	2-1/8"	1-31/32"	6"
8197	1-1/2"	7-3/8"	4-3/8"
189, 8189	1-1/2"	-	-
189F	1-1/2"		
189H	1-1/2"	3-1/8"	4-15/16"
189HWP	1-1/2"	3-1/8"	4-15/16"
189M	1-1/2"	3-1/8"	4-15/16"
189RAC	1-1/2"	-	-
189SM	1-1/2"	-	-
190, 8190	1-1/2"	-	-
191, 8191	1-1/2"	-	-
192, 8192	1-1/2"	-	-
192SM	1-1/2"	-	-
232D	2-1/8"	-	-
193, 8193	1-1/2"	1-31/32"	6"
196, 8196	1-1/2"	6-7/8"	4-3/8"
201, 8201	1-1/2"	-	-
203, 8203	1-1/2"	-	-
208, 8208	1-1/2"	6-13/16"	5-15/16"
231, 8231	2-1/8"	-	-
232, 8232	2-1/8"	-	-
232F	2-1/8"	-	-
232H	2-1/8"	3-1/8"	4-15/16"
232M	2-1/8"	7"	4-15/16"
232-OW	2-1/8"	-	-
232RAC	2-1/8"	-	-
232SM	2-1/8"	-	-
233, 8233	2-1/8"	-	-
235, 8235	2-1/8"	7"	4-5/16"
911-3	2-1/8"	-	-
911-4	2-1/8"	7-5/8"	4-3/8"
911-6	1-1/2"	-	-
911-9	1-1/2"	-	-

3-3/4" Square Conduit Boxes

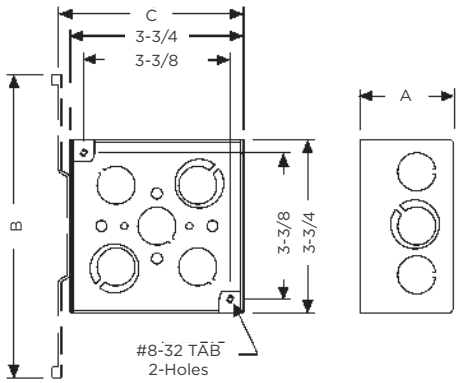

Cat. #	Dimensions		
	A (Inside)	B	C
255	3-1/2"	7-5/8"	3-3/4"
911-1	3-1/2"	7-5/8"	3-3/4"
256	3-1/2"	-	-
911-2	3-1/2"	-	-

4" Square Cable Boxes

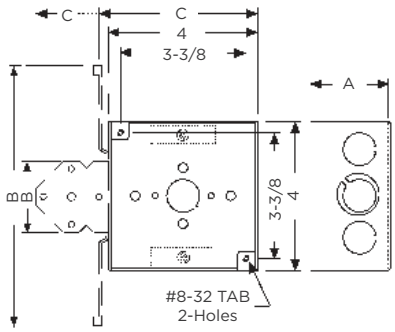

Cat. #	Dimensions		
	A (Inside)	B	C
223	1-1/2"	6-7/8"	4-3/8"
224	1-1/2"	1-31/32"	6"
225	1-1/2"	1-31/32"	6"
228	1-1/2"	4-5/8"	5-1/2"
229	1-1/2"	4-5/8"	5-1/2"
242	2-1/8"	-	-
243	2-1/8"	4-5/8"	5-1/2"
248	1-1/2"	-	-
249	2-1/8"	1-31/32"	6"
211, 8211	1-1/2"	-	-
213, 8213	1-1/2"	-	-
213HWP	1-1/2"	3-1/8"	4-15/16"
218, 8218	1-1/2"	6-7/8"	4-3/8"
240, 8240	2-1/8"	7"	4-5/16"
241, 8241	2-1/8"	7"	4-5/16"
248HWP	2-1/8"	3-1/8"	4-15/16"

Square Boxes

4-11/16" Square Conduit Boxes

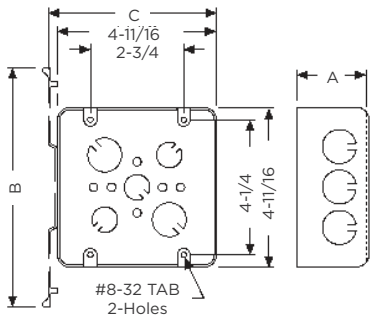

Cat. #	Dimensions		
	A (Inside)	B	C
245	1-1/2"	-	-
246	1-1/2"	-	-
247	1-1/2"	-	-
250	1-1/2"	-	-
254	2-1/8"	7-5/8"	5-1/16"
258	2-1/8"	-	-
259	2-1/8"	-	-
260	3-1/4"	-	-
262	2-1/8"	-	-
257, 8257	2-1/8"	-	-
257F	2-1/8"	-	-
257H	2-1/8"	-	-
257HS	2-1/8"	-	-
257M	2-1/8"	-	-
257SM	2-1/8"	-	-
258SM	2-1/8"	-	-
265, 8265	2-1/8"	-	-
911-12	2-1/8"	-	-
911-15	3-1/4"	-	-

Ceiling Fan Support Products

Ceiling Fan Boxes

291-1, 294, 294-1 (New Work)

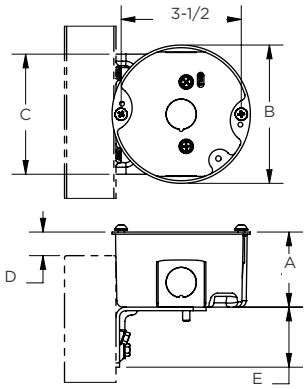

294, 294-1 (Old Work)

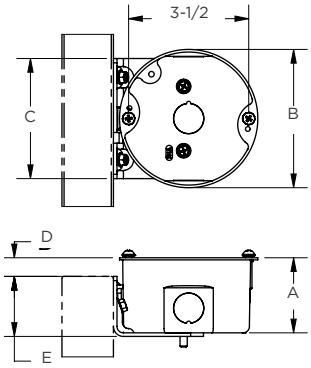

295 and 295-1

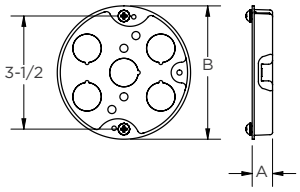

296 – 299

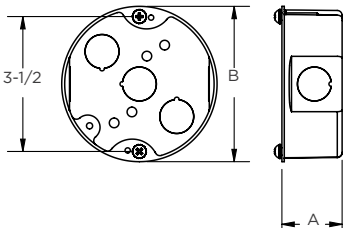

Cat. #	Dimensions				
	A (Inside)	B	C	D	E
291-1	1-1/2"	4"	3-1/2"	1/2"	1-3/4"
294, 294-1	2-1/8"	4"	3-1/2"	1/2"	1-3/4"
295, 295-1	1/2"	4"	-	-	-
296, 296-1	1-1/2"	4"	-	-	-
299	2-1/8"	4"	-	-	-

Ceiling Pans

Ceiling Pans – 3-1/2"
287, 292 and 8292

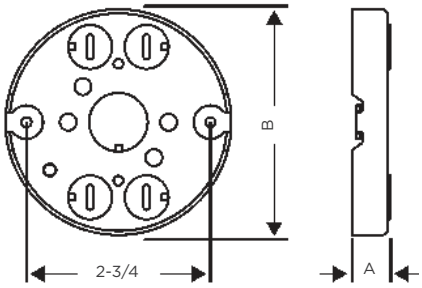

Ceiling Pans – 4"
293 and 8293

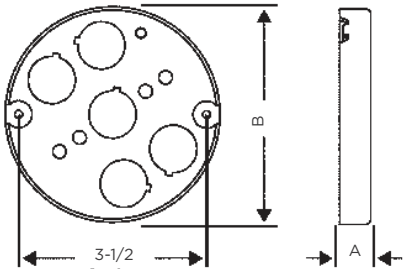

Cat. #	Dimensions	
	A (Inside)	B
287	11/16"	3-3/8"
292	1/2"	3-3/8"
8292	1/2"	3-3/8"
293	1/2"	4"
8293	1/2"	4"

Detailed Drawings

Octagon Boxes

3-1/2" Octagon Boxes

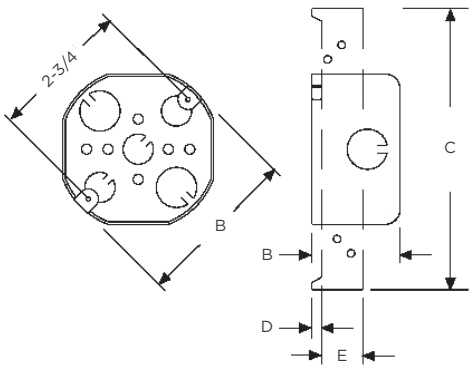

Cat. #	Dimensions				
	A (Inside)	B	C	D	E
110	1-1/2"	3-1/2"	-	-	-
111	1-1/2"	3-1/2"	-	-	-
112	1-1/2"	3-1/2"	-	-	-
119	1-1/2"	3-1/2"	7"	-	1-1/16"

4" Octagon Cable Boxes

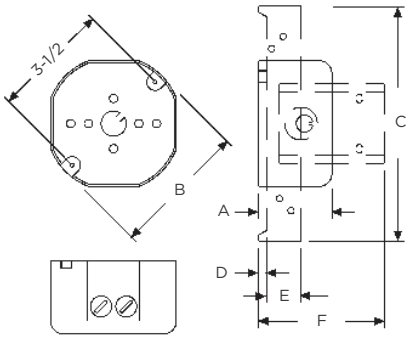

Cat. #	Dimensions					
	A (Inside)	B	C	D	E	F
145	1-1/2"	4"	-	-	-	-
146	1-1/2"	4"	-	-	-	-
150	1-1/2"	4"	-	-	-	-
153	1-1/2"	4"	-	-	-	-
155	1-1/2"	4"	7"	1/2"	1-1/16"	-
157	1-1/2"	4"	2-3/8"	-	-	3-1/8"
160	1-1/2"	4"	2-3/8"	-	-	3-1/8"
164	1-1/2"	4"	7"	1/2"	1-1/16"	-
175	2-1/8"	4"	-	-	-	-
176	2-1/8"	4"	2-3/8"	5/8"	-	3-3/4"
177	2-1/8"	4"	7"	1/2"	1-1/16"	-

4" Octagon Conduit Boxes

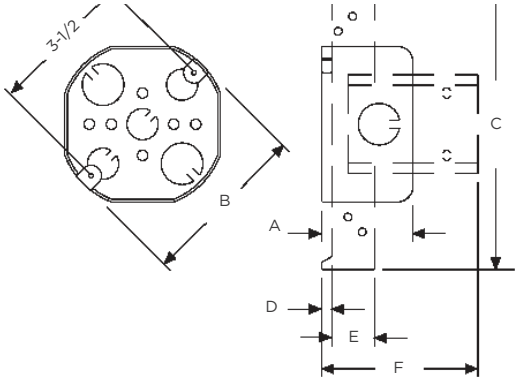

Cat. #	Dimensions					
	A (Inside)	B	C	D	E	F
125, 8125	1-1/2"	4"	-	-	-	-
126	1-1/2"	4"	-	-	-	-
127	1-1/2"	4"	-	-	-	-
128	1-1/2"	4"	-	-	-	-
130	1-1/2"	4"	-	-	-	-
158	1-1/2"	4"	2-3/8"	-	-	3-1/8"
165	2-1/8"	4"	-	-	-	-
166	2-1/8"	4"	-	-	-	-
161	1-1/2"	4"	7"	1/2"	1-1/16"	
167	2-1/8"	4"	-	-	-	-
167TS	2-1/8"	4"	7"	1/2"	1-1/16"	-

Handy Boxes and Switch Boxes

Handy Boxes

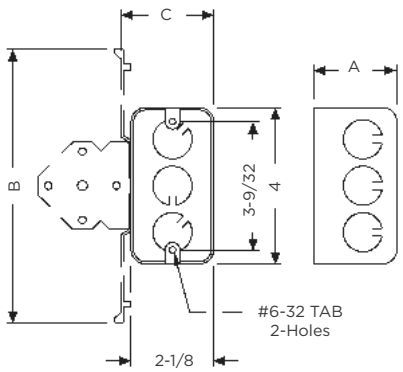

Cat. #	Dimensions		
	A (Inside)	B	C
661	1-7/8"	6-7/16"	2-7/32"
662	1-7/8"	7"	2-3/8"
670RAC	2-1/8"	-	-
8670	2-1/8"	-	-
674	2-1/8"	-	-
678	2-1/8"	7"	2-3/8"
650, 8650	1-1/2"	-	-
650CSA	1-1/2"	-	-
653	1-1/2"	-	-
660, 8660	1-7/8"	-	-
611	1-7/8"	-	-
660SM	1-7/8"	-	-
663, 8663	1-7/8"	-	-
663SM	1-7/8"	-	-
665	1-7/8"	-	-
671	2-1/8"	6-7/16"	2-7/32"

2-Gang Handy Boxes / Switch Boxes

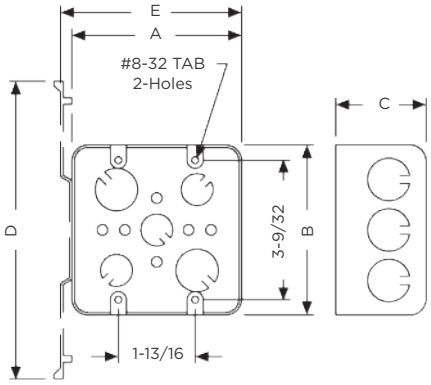

Cat. #	Dimensions				
	A (Inside)	B	C	D	E
680	2-1/8"	4"	4"	-	-
681	2-1/8"	4"	4"	7"	4-9/32"
683	2-1/8"	4"	4"	-	-
685	2-1/8"	4"	4"	7"	4-9/32"

1-Gang and Gangable Conduit Switch Boxes

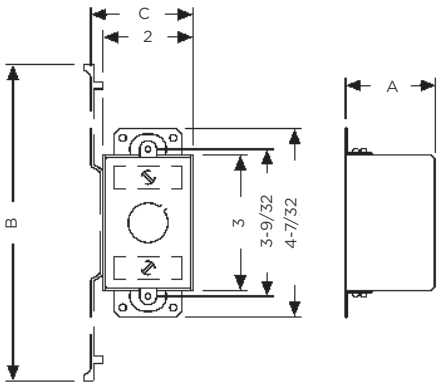

Cat. #	Dimensions		
	A (Inside)	B	C
400	1-1/2"	-	-
420	2"	-	-
501	2-1/2"	-	-
502	2-1/2"	1-31/32"	4"
503	2-1/2"	-	-
506	2-1/2"	-	-
508	2-1/2"	-	-
509	2-1/2"	-	-
560	2-3/4"	-	-
562	2-3/4"	7"	2-13/64"
565	2-3/4"	-	-
591	3-1/2"	-	-
592	3-1/2"	-	-
500, 8500	2-1/2"	-	-
504, 8504	2-1/2"	7"	2-13/64"
590, 8590	3-1/2"	-	-

Detailed Drawings

Switch Boxes

1-Gang and Gangable Cable Switch Boxes

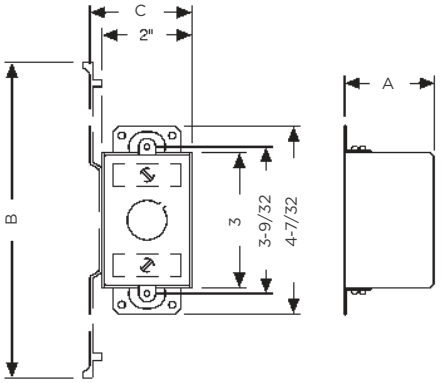

Cat. #	Dimensions		
	A (Inside)	B	C
410	1-1/2"	-	-
440	2"	-	-
445	2"	-	-
471	2-1/4"	-	-
473	2-1/4"	-	-
487	2-1/4"	-	-
512	2-1/2"	-	-
517	2-1/2"	-	-
518	2-1/2"	-	-
519	2-1/2"	-	-
522	2-1/2"	1-31/32"	5-3/64"
523	2-1/2"	-	-
526	2-1/2"	1-3/8"	3-13/32"
528	2-1/2"	-	-
529	2-1/2"	1-31/32"	5-3/64"
531	2-1/2"	7"	2-13/64"
545	2-1/2"	-	-
564	2-3/4"	7"	2-13/64"
567	2-3/4"	-	-
574	2-3/4"	7"	2-13/64"
600	3-1/2"	-	-
603	3-1/2"	1-31/32"	4"
604	3-1/2"	7"	2-13/64"
605	3-1/2"	7"	2-13/64"
524, 8524	2-1/2"	7"	2-13/64"
570RAC	2-3/4"	-	-
601, 8601	3-1/2"	-	-

Multi-Device Switch Boxes

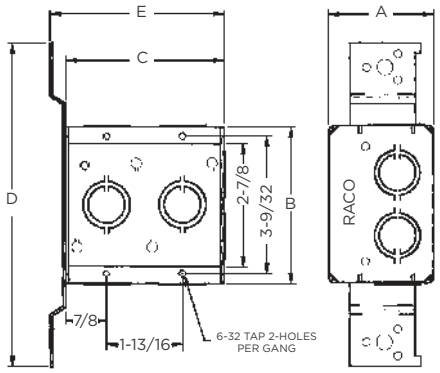

Cat. #	Dimensions				
	A (Inside)	B	C	D	E
686	2-1/2"	3-3/4"	5-9/16"	7-5/8"	5-31/32"
687	2-1/2"	3-3/4"	7-3/8"	7-5/8"	7-25/32"

Multi-Gang Boxes

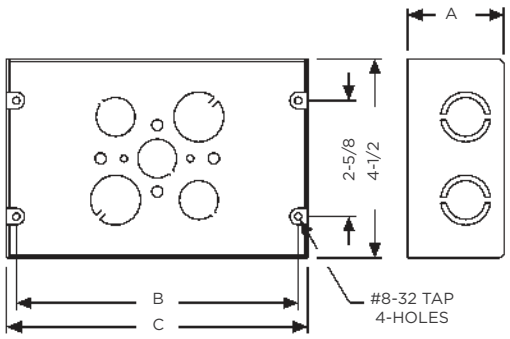

Cat. #	Dimensions		
	A (Inside)	B	C
941	2-1/2"	6-3/8"	6-13/16"
942	2-1/2"	8-3/16"	8-5/8"
943	2-1/2"	10"	10-7/16"
944	2-1/2"	11-13/16"	12-1/4"
945	2-1/2"	13-5/8"	14-1/16"
951	1-5/8"	6-3/8"	6-13/16"
952	1-5/8"	8-3/16"	8-5/8"
953	1-5/8"	10"	10-7/16"
954	1-5/8"	11-13/16"	12-1/4"
955	1-5/8"	13-5/8"	14-1/16"
956	1-5/8"	15-7/16"	15-7/8"
957	1-5/8"	17-1/4"	17-11/16"
958	1-5/8"	19-1/16"	19-1/2"

Concrete Rings and Masonry Boxes

Steel Concrete Rings

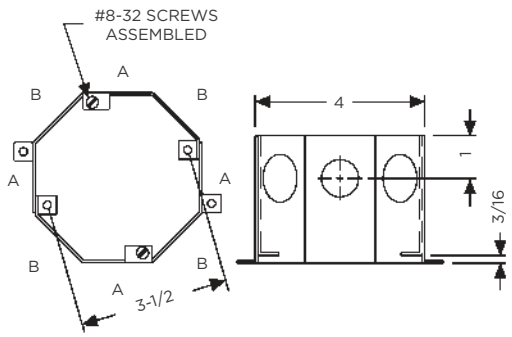

Knockout Size	Dimensions	
	A	B
1/2" & 3/4"	1/2"	3/4"
3/4" & 1"	3/4"	1"

Steel Masonry Boxes

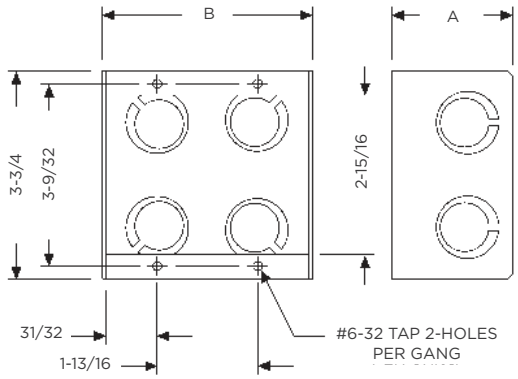

Cat. #	Dimensions	
	A (Inside)	B
688	2-1/2"	1-15/16"
690	2-1/2"	1-31/32"
691	2-1/2"	3-25/32"
692	2-1/2"	5-19/32"
693	2-1/2"	7-13/32"
694	2-1/2"	9-7/32"
960	2-1/2"	11-1/32"
689	3-1/2"	5-19/32"
695	3-1/2"	1-31/32"
8695	3-1/2"	1-31/32"
696	3-1/2"	3-25/32"
697	3-1/2"	5-19/32"
698	3-1/2"	7-13/32"
699	3-1/2"	9-7/32"
965	3-1/2"	11-1/32"

Non-Metallic Boxes, Covers, and Accessories

Standards, 2023 National Electrical Code®

Most Often Requested Sections of the 2020 National Electric Code®	How RACO® Products Help Complete the Installation
314.27 (A) Boxes at Lighting Fixture Outlets. Outlet boxes or fittings designed for the support of lighting fixtures, and installed as required by 314.23 , shall be permitted to support a light fixture.	Our octagon boxes are designed for direct mounting of light fixtures of 6 lbs or less. Device boxes are designed for the mounting, (by #6-32 screws), of devices such as snap-switches and receptacles. They are not suitable for support other than for very lightweight devices, such as a smoke alarm unit. (See Article 314.27 (A) (1) or wall fixtures 6 lbs. or less [See 314.27 (A) (1) [Exception].
410.20 Space for Conductors. Canopies and outlet boxes taken together shall provide adequate space so that fixture conductors and their connecting devices can be properly installed.	When calculating the minimum cubic inch requirements for an outlet box, the canopy may be included in the calculation. However, the canopy of the fixture/fan needs to be marked with the cubic inch capacity. The volume of an unmarked canopy may be used at the discretion of the local authority having jurisdiction.
314.27 (B) Floor Boxes. Boxes listed specifically for this application shall be used for receptacles located in the floor. Exception: Boxes located in elevated floors of show windows and similar locations where the authority having jurisdiction judges them free from physical damage, moisture and dirt.	Only boxes that are UL Listed for the application may be fastened into the floor. RACO® floor boxes are in Section C in this catalog.
314.27 (C) Boxes at Fan Outlets. Boxes that support ceiling fans must be listed for that purpose.	At any ceiling outlet that is intended to have a ceiling (paddle) fan installed, a UL Listed outlet box rated for ceiling fan support must be used. RACO offers a complete line of products designed for various applications and mounting needs.
410.36 (A) Means of Support — Outlet Boxes. Where the outlet box or fitting will provide adequate support, a fixture shall be attached thereto or be supported as required by Section 314.27(A) (1) for boxes.	All outlet boxes that are intended to be used with fixtures are tested in accordance with UL 514A for steel boxes, UL 514C for plastic boxes. The test does provide an ample margin for safety.
406.12, 406.3B, 406.4 Tamper-Resistant Receptacles in dwelling units.	This prevents shocks to small children that like to insert keys, paper clips, etc. into the receptacle slots.

1-Gang

Non-Metallic Cable Boxes

7302RAC, 7820RAC

7873RAC

Applications

- RACO® Non-Metallic cable boxes are used in branch circuit wiring to splice wires
- Accommodate wiring devices such as switches and receptacles
- Provide excellent protection for wiring system or devices

Product Features

- RACO® Non-Metallic cable boxes provide the installer with a cost alternative that is lightweight and easy to install
- Single-gang boxes have knockouts that break out quickly and cleanly for faster installation
- Positioning tabs for fast accurate mounting on studs or joists
- Oversized nail support that resists hammer impact and prevents box deformation

Standard Material

- Made of heavy-duty PVC (Polyvinyl chloride) compound

Compliance

- UL LISTED
- Boxes are listed for their Electrical Applications (Electrical Codes), UL Green Book
- Boxes are listed for mechanical properties, including the 2-hour Fire Rating, (building codes) UL Orange Book
- Federal Manufacturer's number 28488

1-Gang with Captive Nails – *For Non-Metallic Sheathed Cable*

Catalog #	Description	Cable Knockouts	Std. Pkg.	Bar Code
7302RAC	2-3/4″ Deep, 18.0 Cu. In. (294.9 cm3), Nails, 1/2″ Setback	4	100	IIIIIIII
7820RAC	3-3/16″ Deep, 20.3 Cu. In. (332.6 cm3), Nails, 1/2″ Setback	4	100	IIIIIIII
7873RAC	3-1/2″ Deep, 23.0 Cu. In. (376.8 cm3), Nails, 1/2″ Setback	4	100	IIIIIIII

Applications

- Quickly repair stripped or damaged plastic electrical boxes—no need to replace the entire box. This strong metal clip holds outlets and switches tight.

Product Features

- Eliminates the need to replace the box
- Fits flush to the box using patented design
- Works on almost any plastic box type or thickness
- Slides easily to align screw holes
- Saves time and money for property managers and DIYers

See end of section (Pg A104) for detailed drawings »

NEW

8988RAC

1-Gang with Captive Nails – *For Non-Metallic Sheathed Cable*

Catalog #	Description	Std. Pkg.	Bar Code
8988RAC*	Plastic box repair clip, 10 bags of 10 clips and screws	100	IIIIIIII

*Notes: *Not UL Listed.*

Non-Metallic Cable Boxes

Applications

- RACO® Non-Metallic cable boxes are used in branch circuit wiring to splice wires
- Accommodate wiring devices such as switches and receptacles
- Provide excellent protection for wiring system or devices

Product Features

- RACO® Non-Metallic cable boxes provide the installer with a cost alternative that is lightweight and easy to install
- Self-clamping wire entry clamps
- Positioning tabs for fast accurate mounting on studs or joists
- Oversized nail support that resists hammer impact and prevents box deformation

Standard Material

- Made of heavy-duty PVC (Polyvinyl chloride) compound

Compliance

- UL LISTED
- Boxes are listed for their Electrical Applications (Electrical Codes), UL Green Book
- Boxes are listed for mechanical properties, including the 2-hour Fire Rating (except 7645RAC), (building codes) UL Orange Book

7835RAC

7645RAC

7846RAC

7848RAC

7874RAC

2-Gang with Captive Nails for Wood Studs – *For Non-Metallic Sheathed Cable*

Catalog #	Description	Cable Clamps	Cu. In. Cap.	Std. Pkg.	Bar Code
7835RAC	2-29/32" Deep, Nails	8	32.5 (532.5 CM³)	15	IIIIIIII

Multi-gang with Captive Nails for Wood Studs – *For Non-Metallic Sheathed Cable*

Catalog #	Description	Cable Clamps	Cu. In. Cap.	Std. Pkg.	Bar Code
7645RAC	2-5/8" Deep, 4-Gang, Nails, 1/2" Setback, Bracket Support	12	55.0 (901.2 CM³)	25	IIIIIIII
7846RAC	2-3/4" Deep, 3-Gang, Nails, 1/2" Setback	12	44.0 (720.9 CM³)	8	IIIIIIII

Multi-gang, Large Capacity, with Captive Nails – *For Wood Stud or Face Mount to Wood or Metal Stud - Non-Metallic Sheathed Cable*

Catalog #	Description	Cable Clamps	Cu. In. Cap.	Std. Pkg.	Bar Code
7848RAC	3-7/8" Deep, 2-Gang, Nails, 1/2" Setback, Bracket	8	48.0 (786.5 CM³)	50	IIIIIIII
7847RAC	3-7/8" Deep, 3-Gang, Nails, 1/2" Setback, Bracket	12	74.0	50	IIIIIIII

See end of section (Pg A104) for detailed drawings »

Non-Metallic Cable Boxes

Applications

- RACO® Non-Metallic cable boxes are used in branch circuit wiring to splice wires
- Accommodate wiring devices such as switches and receptacles
- Provide excellent protection for wiring system or devices

Product Features

- RACO® Non-Metallic cable boxes provide the installer with a cost alternative that is lightweight and easy to install
- Single-gang boxes have knockouts that break out quickly and cleanly for faster installation
- Positioning tabs for fast accurate mounting on studs or joists

Standard Material

- Made of heavy-duty PVC (Polyvinyl chloride) compound

Compliance

- UL LISTED
- Boxes are listed for their Electrical Applications (Electrical Codes), UL Green Book
- Boxes are listed for mechanical properties, including the 2-hour Fire Rating, (building codes) UL Orange Book
- Federal Manufacturer's number 28488

7308RAC

7318RAC

7717RAC

1-Gang with Brackets for Metal or Wood Studs – *For Non-Metallic Sheathed Cable*

Catalog #	Description	Cable Knockouts	Std. Pkg.	Bar Code
7308RAC	1-1/4" Deep, 8.0 Cu. In. (131.0 cm3), 3/8" Setback, Bracket	2	25	IIIIIIII
7318RAC	1-1/4" Deep, 8.0 Cu. In. (131.0 cm3), Flanged, 3/8" Setback	2	25	IIIIIIII
7717RAC	2-27/32" Deep. 20.0 Cu. In. (327.7 cm3), Face Mount, 1/2" Setback	4	100	IIIIIIII

See end of section (Pg A104) for detailed drawings »

Non-Metallic Cable Boxes

Applications

- RACO® Non-Metallic cable boxes are used in branch circuit wiring to splice wires
- Accommodate wiring devices such as switches and receptacles
- Provide excellent protection for wiring system or devices

Product Features

- RACO® Non-Metallic cable boxes provide the installer with a cost alternative that is lightweight and easy to install
- Self-clamping wire entry clamps
- Extra long, metal swing arms ensure secure installation
- RACO® 7122RAC and 7922RAC feature wrap-around metal clamp to secure box to sheetrock

Standard Material

- Made of heavy-duty PVC (Polyvinyl chlor-ide) compound. 7122RAC and 7922RAC are polycarbonate

Compliance

- UL LISTED
- Boxes are listed for their Electrical Applications (Electrical Codes), UL Green Book
- Boxes are listed for mechanical properties, including the 2-hour Fire Rating, (building codes) UL Orange Book

7887RAC

7488RAC

7122RAC

7922RAC

7232RAC

978

980
BOX-LOC®

Old Work Cable Boxes – *For Non-Metallic Sheathed Cable*

Cat. #	Description & Setback	Cable Clamps	Std. Pkg.	Bar Code
7887RAC	1-Gang, 2-29/32" Deep, 14.0 Cu. In. (229.4 cm3), Flush Mount	4	50	IIIIIIII
7488RAC	2-Gang, 2-3/4" Deep, 25.0 Cu. In. (409.6 cm3), Flush Mount	6	30	IIIIIIII
7122RAC	3-1/2" Round, 2-13/16" Deep, 18.0 Cu. In. (294.9 cm3), Flush Mount, Recommended Max. Support Loads - 6 Fixture Lbs. (Static)	4	100	IIIIIIII
7922RAC	3-1/2" Round, 2-13/16" Deep, 18.0 Cu. In. (294.9 cm3), Flush Mount, Ground Plate	4	100	IIIIIIII

4" Square Boxes – *For Non-Metallic Sheathed Cable*

Cat. #	Description & Setback	Cable Clamps	Std. Pkg.	Bar Code
7232RAC	2-5/8" Deep, 32.0 Cu. In. (524.3 cm3), Nails	10	8	IIIIIIII

Accessories

Cat. #	Description	Std. Pkg.	Bar Code
978	Far-side Box Support	50	—
980	BOX-LOC Metal Stud Clip	50	IIIIIIII

See end of section (Pg A104) for detailed drawings »

Round Cable Ceiling Boxes with Captive Nails

Non-Metallic Cable Boxes

Applications

- RACO® Non-Metallic cable boxes are used in branch circuit wiring to splice wires
- Provide excellent protection for wiring system or devices
- For use wherever lighting fixture canopies are to be installed
- Ceiling boxes on this page are not designed for ceiling fan support

Product Features

- RACO® Non-Metallic cable boxes provide the installer with a cost alternative that is lightweight and easy to install
- Self-clamping wire entry clamps
- Round fixture boxes offer an optional front-mounted grounding screw
- Oversized nail support that resists hammer impact and prevents box deformation

Standard Material

- Made of heavy-duty engineered compound. Base material is polycarbonate

Compliance

- UL LISTED
- Boxes are listed for their Electrical Applications (Electrical Codes), UL Green Book
- Boxes are listed for mechanical properties, including the 2-hour Fire Rating, (building codes) UL Orange Book

7119RAC

7919RAC

7823RAC

7824RAC

Round Ceiling Boxes

Cat. #	Description & Setback	Cable Clamps	Std. Pkg.	Recommended Max. Support Loads		Bar Code
				Ceiling Fan (Dynamic)	Fixture Lbs (Static)	
3-1/2" – *With Captive Nails, For Non-Metallic Sheathed Cable*						
7119RAC	2-5/8" Deep, 18.0 Cu. In. (294.9 cm3), 1/2" Setback, Nails	4	75	—	50	IIIIIIII
7919RAC	2-5/8" Deep, 18.0 Cu. In. (294.9 cm3), 1/2" Setback, Nails, Ground Plate	6	75	—	50	IIIIIIII
4" – *With Captive Nails, For Non-Metallic Sheathed Cable*						
7823RAC	2-3/8" Deep, 20.0 Cu. In. (327.7 cm3), Ground Plate, 3/8" Setback, Nails	4	75	—	50	IIIIIIII
7824RAC	2-3/8" Deep, 20.0 Cu. In. (327.7 cm3), 3/8" Setback, Nails	4	75	—	50	IIIIIIII

See end of section (Pg A105) for detailed drawings »

Non-Metallic Cable Boxes

Applications

- RACO® Non-Metallic cable boxes are used in branch circuit wiring to splice wires
- Provide excellent protection for wiring system or devices
- RACO® 7907, 7307, 7825, 7826RAC are not designed for ceiling fan support

Product Features

- RACO® Non-Metallic cable boxes provide the installer with a cost alternative that is lightweight and easy to install
- Self-clamping wire entry clamps
- Round fixture boxes offer an optional front-mounted grounding screw
- For use wherever fans (Cat. #7120, 7120-1, 7120-VB only) or lighting fixture canopies are to be installed

Standard Material

- Made of heavy-duty engineered compound. Base material is polycarbonate

Compliance

- UL LISTED
- All versions of RACO 7120 are UL approved for Non-Metallic wiring systems
- Boxes are listed for their Electrical Applications (Electrical Codes), UL Green Book
- Boxes are listed for mechanical properties, including the 2-hour Fire Rating, (building codes) UL Orange Book

7307

7907

7307

7907

7120VB
SADDLE-BOX®

7120
SADDLE-BOX®

7120-1
SADDLE-BOX®

Round Ceiling Set-up

Cat. #	Description & Setback	Cable Clamps	Std. Pkg.	Recommended Max. Support Loads		Bar Code
				Ceiling Fan (Dynamic)	Fixture Lbs (Static)	
3-1/2" – *For Spanning from Joist to Joist for Non-Metallic Sheathed Cable*						
7307*	2-5/8" Deep, 18.0 Cu. In. (294.9 cm3), 1/2" Setback, Nails	4	25	—	10①	IIIIIIII
7907*	2-5/8" Deep, 18.0 Cu. In. (294.9 cm3), 1/2" Setback, Adj. 14-3/4" - 22-1/2", w/Ground Plate	4	25	—	10①	IIIIIIII
4" – *For Spanning from Joist to Joist for Non-Metallic Sheathed Cable*						
7826RAC	2-3/8" Deep, 20.0 Cu. In. (327.7 cm3), Adj. 14-3/4" - 22-1/2"	6	25	—	10①	IIIIIIII
7825	2-3/8" Deep, 20.0 Cu. In. (327.7 cm3), Adj. 14-3/4" - 22-1/2", w/Ground Plate	6	25	—	10①	IIIIIIII

① 10 Lbs. max. load recommended UL Rated for 50 Lbs. on 16" centers.

Saddle-Box® 4" Round Ceiling Fan & Fixture Box – *For Non-Metallic Sheathed Cable or Conduit*

Cat. #	Description & Setback	Cable Clamps	Std. Pkg.	Recommended Max. Support Loads		Bar Code
				Ceiling Fan (Dynamic)	Fixture Lbs (Static)	
7120VB	12.5 Cu. In. (204.8 cm3)	4	24	70	210	IIIIIIII
7120*	12.5 Cu. In. (204.8 cm3)	4	20*	70	210	IIIIIIII
7120-1	12.5 Cu. In. (204.8 cm3)	4	24	70	210	IIIIIIII

*Notes: * Packaged in a stackable, individual chipboard display cartons.*

See end of section (Pg A105) for detailed drawings »

Non-Metallic Shallow Cable Boxes

Applications

- RACO® Non-Metallic cable boxes are used in branch circuit wiring to splice wires
- Provide excellent protection for wiring system or devices
- Accommodate wiring devices such as switches and receptacles
- Great for use in trailer applications

Product Features

- RACO® Non-Metallic cable boxes provide the installer with a cost alternative that is lightweight and easy to install
- Self-clamping wire entry clamps
- All outlet boxes have a front-mounted grounding screw with combination straight/Robertson head
- Positioning tabs provide fast, accurate mounting on studs or joists
- Grounding screw provided

Standard Material

- Made of high strength Noryl®
- Noryl® is a registered trademark of General Electric Corporation

Compliance

- c UL US LISTED
- Federal Manufacturer's number 28488

7322-OW

1-Gang Shallow Trailer Box – *For Non-Metallic Sheathed Cable*

Cat. #	Description	Std. Pkg.	Bar Code
7322-OW	1-3/4" Deep, 16.0 Cu. In. (262.1 cm3), Old work wings	50	IIIIIIII

Non-Metallic Cable Boxes

Applications

- Vapor barrier boxes prevent unwanted penetration of exterior air and help maintain the existing interior environment from elements outside of the structure
- RACO® Non-Metallic vapor barrier cable boxes provide the installer with a cost alter-native that is lightweight and easy to install
- RACO® Non-Metallic cable boxes are used in branch circuit wiring to splice wires
- Accommodate wiring devices such as switches and receptacles
- Serve as fixture support
- Provide excellent protection for wiring system or devices

Product Features

- Self-clamping wire entry clamps
- 7120VB boxes have a front-mounted grounding screw with combination straight/Robertson head
- Vapor/air barrier flange and integral wire entry seal provides superior energy savings and quick installation
- Hands free installation
- For 1/2", 5/8", or 3/4" drywall
- Unique saddle design straddles standard joists - 7120VB
- 7120VB prevents unwanted penetration of exterior air and helps maintain the existing interior environment from the elements outside the structure
- Fits any 1-1/2" wide joist

Standard Material

- Made of high strength Noryl®
- Noryl® is a registered trademark of General Electric Corporation

Compliance

- c UL us LISTED

2011FBAR

2022FBAR

2023FBAR

NEW

82024FBAR

2028FBAR

7120VB
SADDLE-BOX®

NEW

87121VB

Vapor Barrier Cable Boxes

Cat. #	Description & Setback	Cable Clamps	Std. Pkg.	Bar Code
2011FBAR	1 Gang, 2-3/4" Deep, 18.0 Cu. In. (294.9 cm3), 1/2" Setback	4	50	IIIIIIII
2022FBAR	2 Gang, 2-3/4" Deep, 35.2 Cu. In. (576.8 cm3), 1/2" Setback	8	50	IIIIIIII
2023FBAR	3 Gang, 2-3/4" Deep, 52.6 Cu. In. (862 cm3), 1/2" Setback	12	25	IIIIIIII
82024FBAR	4 Gang, 2-3/4" Deep, 68.0 Cu. In., 1/2" Setback	12	12	IIIIIIII

4" Round Vapor Barrier Cable Box – *For Ceiling*

Cat. #	Description & Setback	Cable Clamps	Std. Pkg.	Recommended Max. Support Loads		Bar Code
				Ceiling Fan (Dynamic)	Fixture Lbs (Static)	
2028FBAR	2-5/8" Deep, 28.1 Cu. In. (460.5 cm3), 1/2" Setback	4	40	—	50	IIIIIIII
7120VB*	2-5/8" Deep, 12.5 Cu. In. (204.8 cm3), 1/2" Setback	4	24	70	210	IIIIIIII
87121VB	4" Round Ceiling Fan and Fixture Vapor Barrier Box	4	6	70	90	IIIIIIII

*Notes: *Not UL Listed.*

Detailed Drawings

Non-Metallic Cable Boxes

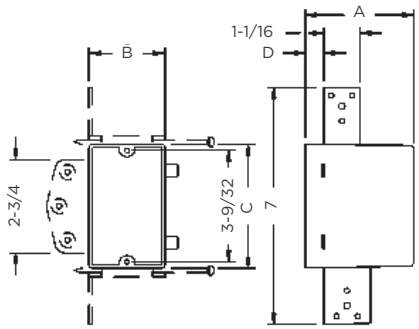

Non-Metallic Outlet Boxes

Catalog Number	A	B	C	D
7302RAC	2-3/4”	2-1/4”	3-19/32”	1/2”
7820RAC	3-3/16”	2-1/4”	3-19/32”	1/2”
7873RAC	3-1/2”	2-1/4”	3-19/32”	1/2”
7308RAC	1-1/4”	2-3/8”	3-1/2”	3/8”
7318RAC	1-1/4”	2-3/8”	3-1/2”	-
7717RAC	2-27/32”	2-1/4”	3-19/32”	1/2”
7848RAC	2-27/32”	2-1/4”	3-19/32”	5/8”
7874RAC	3-3/16”	2-1/4”	3-19/32”	5/8”

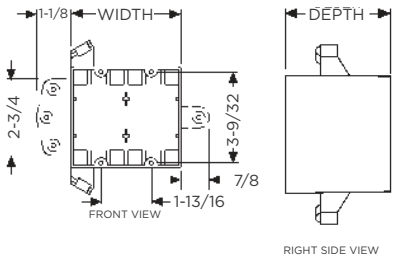

Multi-Gang Outlet Boxes

Catalog Number	Gang	Width	Depth
7835RAC	2	4”	2-29/32”
7645RAC	4	7-5/8”	2-5/8”
7846RAC	3	5-7/8”	2-3/4”
7848RAC	2	4”	3-31/32”
7874RAC	3	8-7/16”	3-31/32”

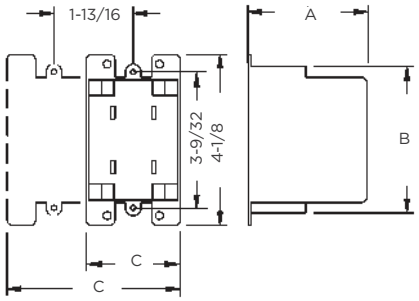

Old Work Non-Metallic Outlet Boxes

Catalog Number	Gang	A	B	C
7887RAC	1	2-29/32”	3-1/8”	2-1/4”
7488RAC	2	2-3/4”	4”	3”

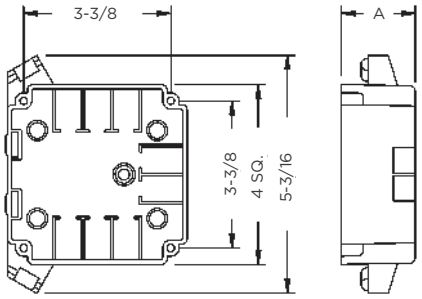

4” Square With Captive Nails for Metal or Wood Studs

Catalog Number	A (Depth)
7220RAC	1-5/8”
7232RAC	2-5/8”

Non-Metallic Cable Boxes

Catalog No's 7122RAC, 7922RAC

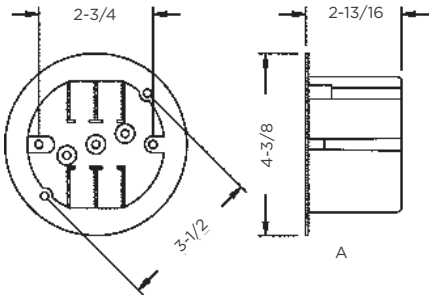

Catalog No's 7119RAC, 7919RAC

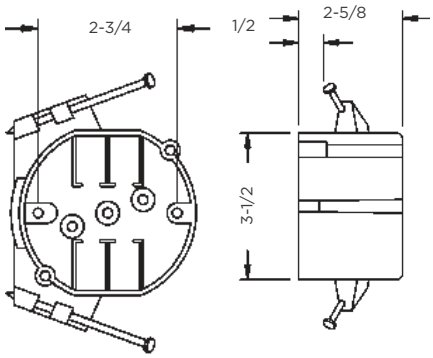

Catalog No's 7823RAC, 7824RAC

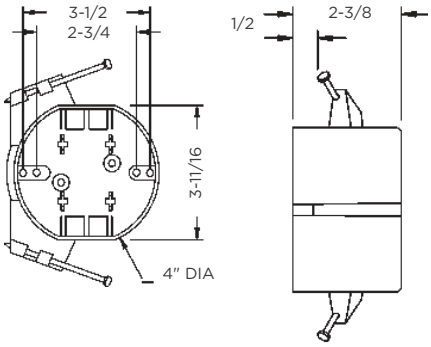

Catalog No's 7120, 7120-1, 7120VB

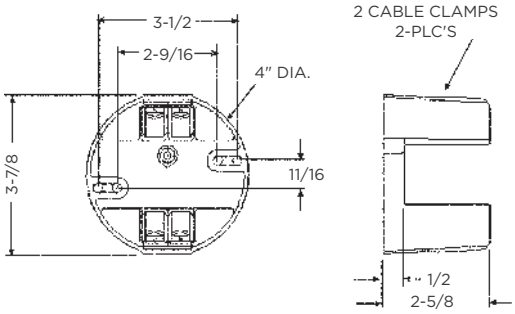

Catalog No's 7307, 7907

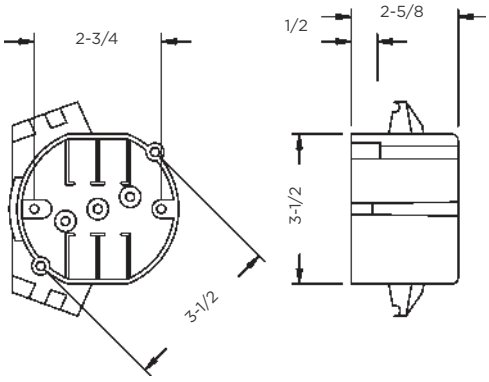

Catalog No's 7825, 7826RAC

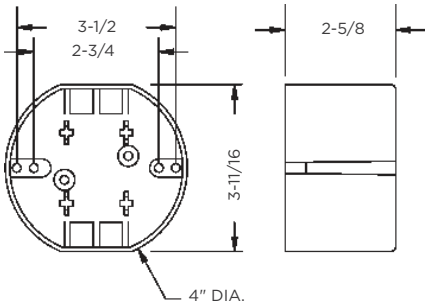

Catalog No's 7322, 7322-OW

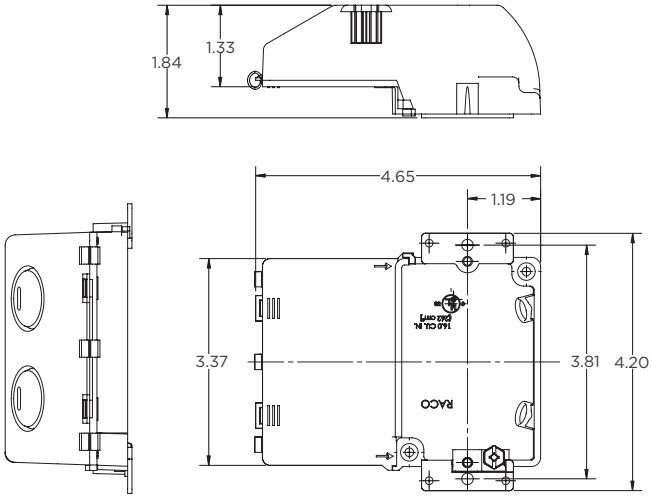

Floor Boxes

General Information

General Information

RACO® floor boxes are ideally suited for heavy floor traffic applications, such as shopping malls, retail stores, banks and schools. Floor boxes are installed in poured concrete floors and are fed with conduit. RACO's complete line includes both single service and three-service (power and voice/data) floor boxes, which are available in cast iron, stamped steel and PVC plastic. Floor box covers and carpet flanges are offered in brushed brass and textured thermoplastic in two designer colors, ivory and gray. RACO floor boxes:

- Are used in branch circuit wiring
- Accommodate wiring devices such as receptacles for voice/data
- Provide excellent protection for wiring system or devices
- Must be closed with a cover
- Permit access to conductors for maintenance

Non-Adjustable Style Features

This type of box has no means for adjustment. It is usually installed in wooden floors or used for retrofitting in concrete:

RACO quality non-adjustable floor boxes feature:

- Rugged cast iron for strength and ground continuity
- Factory-installed ground wire
- Simple one-piece floor box design offers flexibility for power outlet or voice/data outlets
- Conveniently positioned conduit entries are tapped and plugged

Fully-Adjustable Floor Box Features

This type of box has leveling screws for height and leveling adjustments to be made before the concrete is poured, and final leveling adjustments after the concrete is poured. The maximum leveling adjustment is a 7˚ tilt.

Fully adjustable floor boxes feature:

- Concrete-tight floor boxes for use in power or voice/data
- Cast Iron boxes classified as watertight and concrete-tight, typically used below grade where excessive moisture is present.
- Choice of materials - stamped steel or cast iron
- Cast iron floor box including factory installed ground wire, and multiple gang boxes with one ground wire per gang
- Multiple gang boxes provided with low voltage partitions
- Ample wiring space for any combination of power outlet or voice/data outlets

Standard Materials

- Non-Metallic floor box is made of heavy-duty PVC (Polyvinyl chloride) compound. Base material is recycled
- Steel floor boxes are made of .0625 inch thick steel
- Cast iron floor boxes are made from cast iron having a high tensile strength
- Solid brass covers and carpet flanges
- Non-Metallic floor box covers and carpet flanges are made of high strength thermoplastic (ABS)

Standard Finishes

- Natural gray finish on non-metallic floor box
- Non-Metallic floor box covers and carpet flanges are available in gray powder coat paint finish
- Steel boxes have a zinc coating
- Cast iron floor boxes have a gray powder coat paint finish
- Solid brass covers and carpet flanges have a brushed finish

Compliances

Floor boxes are subject to the same code requirements and minimum conductor fill requirements as other boxes. RACO floor boxes carry the following compliances:

- UL Standard 514-A
- Boxes are listed for their Electrical Applications (Electrical Codes), UL Green Book
- Federal Manufacturer's number 28488

Reference Data

- Minimum wiring capacity calculation can be found on pages A8 of this catalog

Floor Box Installation

Installing a fully adjustable floor box in a poured concrete floor: RACO provides with all box assemblies or flanges a metallic concrete cover. The concrete cover permits pouring concrete to the top of the box. The cover is then easily removed after the pour. To install the box:

- Locate box and install conduit in accordance with local codes
- Secure box to reinforcing bar (mesh)
- Make pre-pour height and leveling adjustments
- Grease inside of cement cover and install on box
- Grease outside of cement cover
- Apply bead of grease on exposed portion of adjusting collar
- Tape cement cover to box
- Pour concrete
- After the concrete has set, remove the concrete cover
- Pull wires and install wiring device
- Make final pour adjustments, and grout around the box if required
- Install cover plates and/or accessories

General Information

Standards, 2023 National Electrical Codes®

Summary of the Most Often Requested Sections of the 2020 National Electrical Code®	How RACO® Products Help Complete the Installation
210.52 (a) Dwelling Unit Receptacle Outlets - General Provisions. In every kitchen, family room, dining room, living room, parlor, library, den, sun room, bedroom, recreation room, or similar room or area of dwelling units, receptacle outlets shall be installed so that no point along the floor line in any wall space is more than 6 feet, measured horizontally, from an outlet in that space, including any wall space 2 feet or more in width and the wall space occupied by fixed panels in exterior walls, but excluding sliding panels in exterior walls. The space afforded by fixed room dividers, such as freestanding bar-type counters or railings, shall be included in the 6-foot measurement.	The purpose of this Article is to eliminate extension cords that are used within the dwelling. Electrically overloaded extension cords are often a source of fires. Installation of a RACO floor box may help alleviate the need for extension cords by locating receptacles where no wall outlets are installed. Receptacle outlets in floors can be counted as part of the required number of receptacles if they are within 18 inches of the wall.
250.146 Connecting Receptacle Grounding Terminal to Box. An equipment bonding jumper shall be used to connect the grounding terminal of a grounding-type receptacle to a grounded box. Exception (c): Floor boxes designed for and listed as providing satisfactory ground continuity between the box and the device.	All RACO floor boxes are designed and listed for having ground continuity without an equipment bonding jumper. RACO does provide on all of its cast floor boxes a factory-installed ground wire.
314.27(B) Outlet Boxes —Floor Boxes. Boxes listed specifically for this application shall be used for receptacles located in the floor. Exception: Boxes located in elevated floors of show windows and similar locations where the authority having jurisdiction judges them to be free from physical damage, moisture, and dirt.	Only boxes that are UL Listed for the application may be fastened into the floor.
800.133 (A) (3) Installation of Communications Wires, Cables, and Equipment — Electric Light or Power Circuits. Communications conductors shall not be placed in any raceway, compartment, outlet box, junction box, or similar fitting with conductors of electric light or power circuits or Class 1 circuits.	This section applies when power and voice/data are brought to one enclosure. A means of dividing the wiring is required. Voltage dividers are available for the following floor box types: PVC floor box and rectangular fully adjustable.

Quick Selection Guide

Nonadjustable Floor Box System

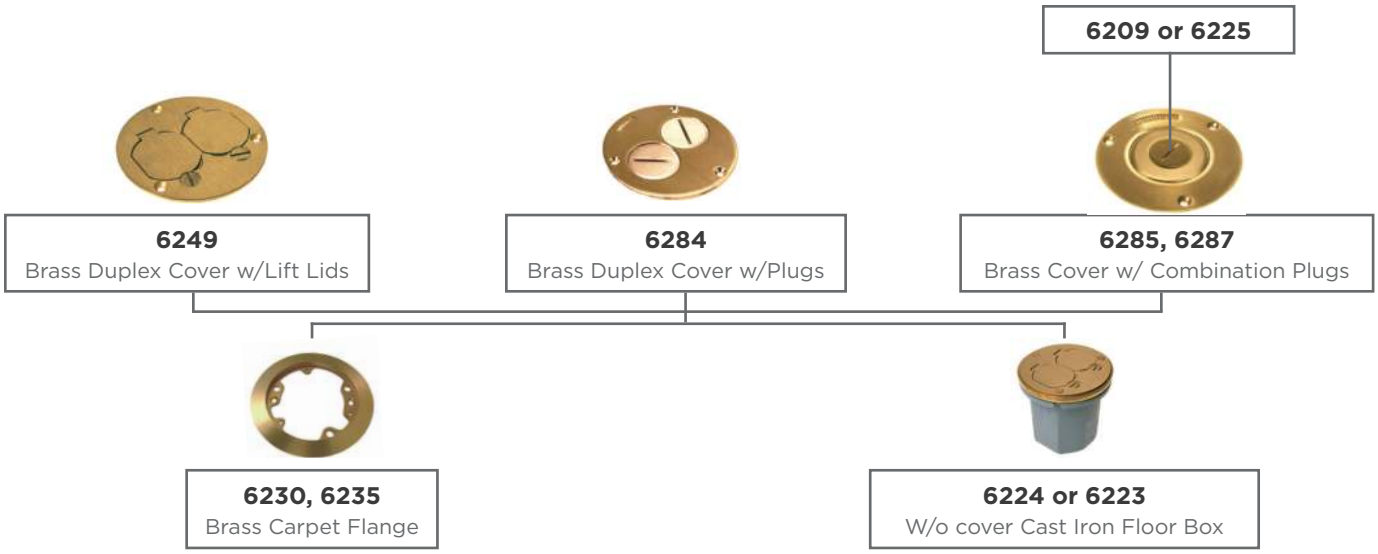

Fully Adjustable Floor Box System

** Included brass tile ring must be removed and discarded before installation of brass carpet flanges. Polycarbonate flanges are installed between box and included brass ring.*

Quick Selection Guide

PVC Floor Box System

6209 or 6225

6249
Brass Duplex Cover w/Lift Lids

6284
Brass Duplex Cover w/Plugs

6285, 6287
Brass Cover w/ Combination Plugs

6268
Non-Metallic Duplex Cover w/Lift Lids

6298
Brass Tile/Flush Flange

6235
Brass Carpet Flange

6233
Clear Polycarbonate Carpet Flange

6244
Adapter

6234
(Optional)*
Low Voltage Divider

6244
Adapter

RAC5500 Kit
Brass Carpet Flange

6299, 6280
Non-Metallic or Brass Duplex Cover w/Lift Lids

5511
PVC Floor Box

5574
(Optional)* "Y" Adapter

**Non-Metallic Box – Multi-Service Option: A voltage separation unit allows the non-metallic box to be used for telephone/data service as well as power. As shown, the unit has two pieces. The lower portion has openings on opposite sides for power wires and ramps on the other two sides for telephone/data wires. Power wires run inside tube and attach to duplex receptacle. Telephone/data wires run outside of tube and pass through grommet(s) in the cover.*

Before installing lower part of voltage separation unit, cut off the same amount from the tube as you cut off the box. Complete the installation of the carpet flange, duplex receptacle and cover.

For Concrete Pour - Non-Metallic

Applications

- Used in branch circuit wiring
- Accommodate wiring devices for various receptacles
- Permit access to conductors for maintenance

General Features

- RACO® Non-Metallic floor box has been engineered from the inside out with features that reduce installation time and offer increased capabilities from one box in power, voice and data
- Hubbell® Non-Metallic floor boxes are economical to install and easy to level off
- A wide choice of cover materials and finishes are available
- 3" minimum pour depth

Low Voltage Divider Features

- Installs inside 5511 floor box for multi-service applications. Use separate conduit runs for power and voice/data cables
- Accepts Hubbell® standard duplex receptacles or 15A Twist-Lok® duplex receptacles (HBL 4700 series)
- Power capacity - 19.6 cubic inches plus 2.40 cubic inches per inch of tube

Compliance

- c UL us LISTED

5511

6234

6244

Round Floor Box Cover and Accessories – *Non-Metallic*

Cat. #	Description	Std. Pkg.	Bar Code
5511	19.5 Cu. In. Capacity per Inch of Height, 2 - 1" and 3/4" Openings	1	—
6234	Voltage Separation Unit, Optional	4	—
6244	Adapter Ring for all Non-Metallic and Brass Flanges	10	—

Floor Box Kits, Covers and Flanges

Non-Metallic / Round

6299

6268

Applications

- RACO® Non-Metallic floor box covers and flanges provide a quick, simple method of completing floor box installation on carpeted floor

Product Features

- RACO® Non-Metallic carpet flanges and covers are available in gray or in ivory finish
- Covers are outfitted with duplex flaps that automatically close when not in use, preventing breakage and eliminating a potential trip hazard
- Cover design keeps debris out when receptacles are not in use
- Hubbell® RACO® carpet flanges and covers install quickly and easily with provided screws
- 3-service floor box cover with duplex flap, two 1/2" diameter low-voltage knockouts. Each low-voltage knockout can accommodate up to (1) 25 pair telephone cable or (1) 50 wire data communication cable NOTE: Brass cover is not 3-service

Compliance

- c UL us LISTED

Floor Box Cover Assembly Kits – *Non-Metallic*

Cat. #	Description	Carpet Flange O.S.Dia.	Std. Pkg.	Bar Code
6299	Adapter, Non-Metallic Gray Carpet Flange, Gray Duplex Cover - Kit	6-1/2"	10	IIIIIIII

Replacement Covers and Carpet Flanges – *Non-Metallic*

Cat. #	Description	Carpet Flange O.S.Dia.	Std. Pkg.	Bar Code
6268	Gray Non-Metallic Duplex Cover with Lift Lids	—	10	—

Floor Box Covers and Flanges

RAC5500KIT

6280

6249

6284

6285, 6287

6230

6298

Applications

- Floor box flanges and covers are used to complete floor box installations on either carpet or tile

Product Features

- Brass floor box covers are designed to be used with round RACO® carpet and tile flanges and RACO round full adjustable stamped steel and cast iron floor boxes
- Flanges are designed to be installed to RACO adapter ring, catalog number 6244
- 6230 is not designed to work with RACO 5511 non-metallic floor box
- Hubbell® RACO® carpet flanges, tile flanges and covers install quickly and easily with provided screws
- Order of installation:
  1. Install RACO floor box
  2. Install non-metallic adapter ring (if round 5511 non-metallic box is used)
  3. Install device to box or 6244 adapter
  4. Install carpet or tile flange
  5. Install cover to carpet or tile flange

Compliance

- c UL us LISTED

Round, Solid Brass Floor Box Cover Kit

Cat. #	Description	Carpet Flange O.S. Diameter	Std. Pkg.	Bar Code
RAC5500KIT	Round, Brass Cover Kit	6-1/4″	10	IIIIIII
6280	Brass Carpet Flange, Adapter and Duplex Cover Kit	6-1/2″	10	IIIIIII

3-7/8” Dia., Round Covers – *Brass*

Cat. #	Description	Std. Pkg.	Bar Code
6249	Brass Duplex Cover with Lift Lids	40	IIIIIII
6284	Brass Duplex Cover with 2, 1-1/2″ Threaded Plugs	40	IIIIIII
6285	Brass Cover with 2-1/8″ x 1″ Combination Plugs	40	IIIIIII
6287	Brass Cover with 2-1/8″ x 3/4″ Combination Plugs	40	IIIIIII

Carpet Flanges

Cat. #	Description	Carpet Flange O.S. Diameter	Std. Pkg.	Bar Code
6230	Brass Carpet Flange, Mop-tight	5-1/4″	10	IIIIIII

Tile Flange

Cat. #	Description	Tile Flange O.S. Diameter	Std. Pkg.	Bar Code
6298	Brass Tile/Flush Application Flange	4-3/16″	15	IIIIIII

For Wood Sub Floors

Floor Boxes for Wood Floors

Applications

- RACO® wood floor boxes provide flush service for power or voice/data
- Non-adjustable floor boxes may be used in wood or concrete floors and are suitable for carpet, tile or wood floor applications

Product Features

- Boxes are non-adjustable
- Cast iron, water-tight
- Gray powder coat paint inside and out for additional corrosion resistance
- 1/2" and 3/4" threaded conduit openings are standard; all bottom openings are accessible
- If floor covering is used, discard included brass flush ring and replace with RACO® 6230 or 6235 brass carpet flange
- RACO® 6224 includes box, 6249 brass duplex cover with lift lids, and brass tile flange. Receptacle is not included
- RACO® 6223 - for use with any RACO 3-7/8" diameter brass cover (6249, 6284, 6285, 6287). Cover must be ordered separately, brass tile flange included

Compliance

- c UL US LISTED

6224

6223

Duplex Receptacle Assembly

Cat. #	Threaded / Hubs		Cubic Inches	Std. Pkg.	Bar Code
	Side	Bottom			
6224	—	2-1/2"	18.5 (303.1 CM³)	4	IIIIIIII

Floor Box

Cat. #	Threaded / Hubs		Cubic Inches	Std. Pkg.	Bar Code
	Side	Bottom			
6223	—	2-1/2"	18.5 (303.1 CM³)	4	IIIIIIII

Floor Box Assemblies with USB Ports

NEW!

6239ACBP

6239ACNI

6239ACBK

Applications

- Place power and charging on wood floor for lighting, entertainment and mobile devices

Product Features: 6239CBP, 6239CNI and 6239CBK

- High power USB ports: one Type A and one Type C
- 15A, 125V tamper resistant receptacle
- Removable neoprene gaskets allow for independent use of either side of the receptacle with cover closed
- Recessed receptacle minimizes plug protrusion

Compliance

- c UL us LISTED

Round, Recessed Floor Boxes – *Brass, Nickel or Black Finish*

Cat. #	Description	Cubic Inches	Std. Pkg.	Bar Code
6239ACBP	Round, Brass Finish	28.0 (458.9 cm3)	1	050169993545
6239ACNI	Round, Nickel Finish	28.0 (458.9 cm3)	1	050169993231
6239ACBK	Round, Black Finish	28.0 (458.9 cm3)	1	050169993224

For Wood Sub Floors

Floor Box Assemblies

6500BR-5

6500NI-5

6239BP

6239NI, 6239SS

6239BK

6RF151SR

Applications

- Floor box kits are used to complete floor box installations on either carpet, tile, or wood floors

Product Features: 6236 and 5236

- Back wiring - clamp type terminals accept up to #10 wire
- 15A, 125V tamper resistant receptacle
- Brass finish cover plate is .058" thick, and 2-3/4" wide x 4-1/2" long
- 6236 includes 3-1/2" deep box

Product Features: 6500BR ANS 6500NI

- Contains low profile, 15A 125V tamper resistant receptacle

Product Features: 6239BP, 6239NI, 6239SS and 6239BK

- Can be used for power/data
- 15A, 125V tamper resistant receptacle
- Removable neoprene gaskets allow for independent use of either side of the receptacle with cover closed
- Recessed receptacle minimizes plug protrusion

Product Features: 6RF1515R

- Has solid brass cover and flange
- 15A, 125V tamper resistant receptacle
- Self-leveling, easy screw fastening

Compliance

- c UL us LISTED

Rectangular, Metallic Floor Box Kit – *Brass Finish or Nickel Finish Cover Plate*

Cat. #	Knockouts / Hubs		Cubic Inches	Std. Pkg.	Bar Code
	Side Conduit	Side Conduit			
6500BR-5	2 - 1/2"	4 - 1/2"	18.5 (303.1 cm3)	5	IIIIIIII
6500NI-5	2 - 1/2"	4 - 1/2"	18.5 (303.1 cm3)	5	IIIIIIII

Round, Recessed Floor Boxes – *Brass, Nickel, Stainless or Black Finish*

Cat. #	Description	Cubic Inches	Std. Pkg.	Bar Code
6239BP	Round, Brass Finish	28.0 (458.9 cm3)	10	IIIIIIII
6239NI	Round, Nickel Finish	28.0 (458.9 cm3)	10	IIIIIIII
6239SS	Round, Stainless Steel Finish	28.0 (458.9 cm3)	10	IIIIIIII
6239BK	Round, Black Finish	28.0 (458.9 cm3)	10	IIIIIIII
6RF151SR	Round, Drop-in, Brass	16.0 (262.1 cm3)	10	IIIIIIII

Replacement Plug for Floor Box Assemblies

Cat. #	Description	Std. Pkg.	Bar Code
RP6239BP	Replacement Plug for 5236/6236	50	IIIIIIII
RP6500BR	Replacement Plug for 6500BR-5	50	IIIIIIII
RP6500NI	Replacement Plug for 6500NI-5	50	IIIIIIII

Floor Box Covers and Flanges

6250

6288

6289

6292, 6295

6294

Applications

- RACO® rectangular floor box brass covers and flanges are used to complete floor box installations

Product Features

- Rectangular brass covers are used with RACO single-gang, two-gang, and three-gang rectangular floor boxes
- Covers are 3" wide x 4-5/32" long
- Cover screw centers are 3-5/32" x 2-1/8"
- Rectangular carpet flanges are available in brass or clear polycarbonate

Compliance

- c UL US LISTED

Rectangular Floor Box Covers – *Brass*

Cat. #	Description	Std. Pkg.	Bar Code
6250	Brass Duplex Cover with Lift Lids	40	IIIIIIII
6288	Brass Duplex Cover with 2, 1-1/2" Threaded Plugs	40	IIIIIIII
6289	Brass Cover with 2-1/8" x 1" Combination Plugs	40	IIIIIIII

Rectangular Carpet Flanges – *Polycarbonate and Brass*

Cat. #	Description	Std. Pkg.	Bar Code
6292	1-Gang, Brass	20	IIIIIIII
6295	1-Gang, Clear Polycarbonate	10	IIIIIIII
6294	3-Gang, Brass	10	IIIIIIII

Brass

Accessories and Replacement Covers

6209

6226

RP6236BP

Applications

- Brass abandon plugs are sold separately for replacement in brass covers
- Split nozzle for 2-1/8" threaded cover consists of interlocking halves that provide a protective housing when assembled. The nozzle may be easily installed without removing an electrical plug from cord. Nozzle is brass colored plastic

Fully Adjustable Floor Box – *Stamped Steel*

Cat. #	Description	Thread Type	Fits RACO Brass Cover	Std. Pkg.	Bar Code
6209	3/4" Crowned, Slotted Plug	—	6287, 6291	30	IIIIIIII
6226	1-1/2" Flush Slotted Plug	Fine	6284, 6288	25	IIIIIIII

Replacement Plugs

Cat. #	Description	Std. Pkg.	Bar Code
RP6236BP	Replacement Plug for 5236/6236	50	—

Service Pedestals and Accessories

6300, 6301

6310

6313

Service Pedestals Applications

- RACO® above-the-floor pedestals satisfy most service requirements
- These are traditional metallic pedestals, offered as component parts to satisfy any combination of power or voice/data requirements

Product Features

- Service pedestal housing die cast aluminum frame, aluminum housing
- Stainless steel face plates

Pedestal Capacity Chart

- (Power or voice/data devices) In certain cases, the pedestal will accommodate two receptacles. In other cases, a device may be too deep, and the maximum capacity is one receptacle

Low-profile Service Pedestal Housing – *Single Service for Power or Voice/Data*

Cat. #	Description	Std. Pkg.	Bar Code
6300	Frame Housing, 3/4″ Chase Nipple, w/o Plates	4	IIIIIIII
6301	Frame Housing, 1″ Chase Nipple, w/o Plates	4	IIIIIIII

Face Plates

Cat. #	Description	Std. Pkg.	Bar Code
6310	Rectangular Cover Flange	25	IIIIIIII
6313	Duplex Receptacle Plate	25	IIIIIIII

Voice/Data Combinations

Max. # of Receptacles	Description	Plate(S) Qty.	Required RACO Cat.#
1	Duplex Jack Outlet	1	**6313, 6310**
1	Decorator Style of Telephone Outlet	1	**6314, 6310**
2	Decorator Style of Telephone Outlet	2	**6314**
0	Bushed Opening	1	**6311, 6310**

Power Combinations

Max. # of Receptacles	Description	Plate(S) Qty.	Required RACO Cat.#
2	Duplex Receptacles	2	**6313**
1	GFCI Receptacles	1	**6314, 6310**
1	Surge Duplex Receptacles	1	**6314, 6310**
2	Decorator Receptacles	2	**6314**
2	Single Receptacles	2	**6312**

Detailed Drawings

Floor Boxes

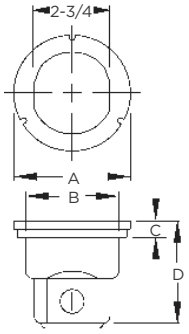

Cast Iron Floor Boxes - *Non Adjustable*

Catalog Number	A	B	C	D
6223	4.19″	3.39″	0.59″	3.75″
6224	4.19″	3.39″	0.59″	3.75″

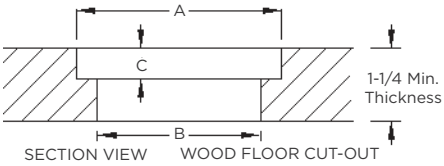

Cast Iron Floor Boxes - *Non Adjustable- Floor Cut-out Dimensions*

Catalog Number	A	B	C
6224	4.1875″	3.4375″	0.625″

** If floor covering is used, vary counter bore depth accordingly.*

NOTE: Minimum floor thickness is 1-1/4″. You may need to add support under the floor around the floor box opening.

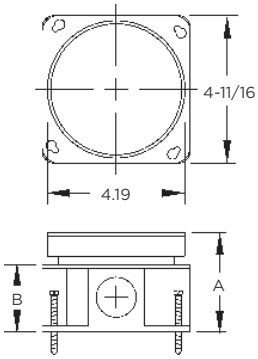

Round Floor Boxes - *Adjustable*

Catalog Number	A (Min.)	A (Max.)	B
6263	2.86″	3.19″	1.69″

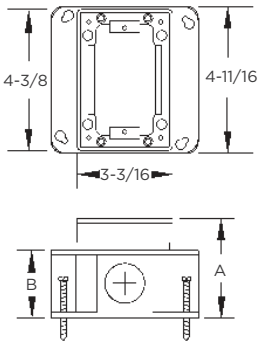

1-Gang Floor Boxes - *Adjustable*

Catalog Number	A (Min.)	A (Max.)	B
6256	3.90″	4.28″	2.83″

Floor Boxes

Non-Metallic Floor Box

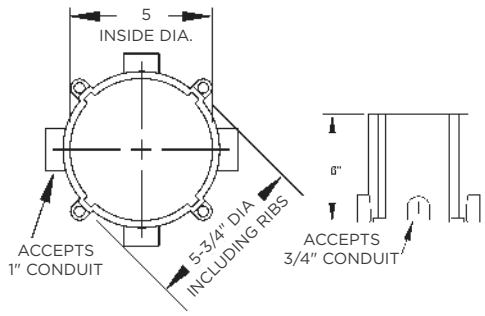

Replacement Covers

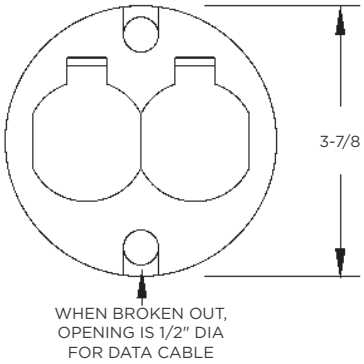

Replacement Carpet Flanges

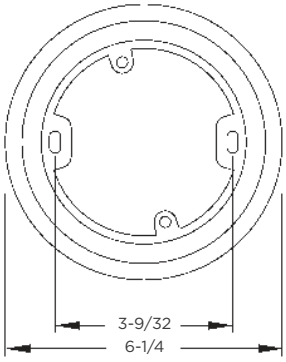

Service Pedestal

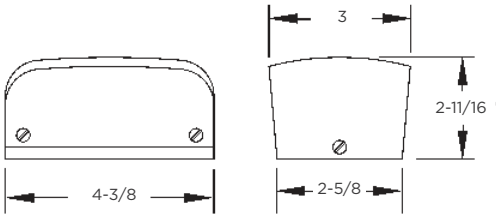

Notes

Notes

Since 1896, RACO has consistently delivered high-quality steel electrical boxes. TayMac and BELL provide weatherproven™ outdoor electrical solutions.

GET IN TOUCH:

custserv@hubbell.com

(574) 234-7151

www.hubbell.com/raco

RACO
3902 W. Sample St.
South Bend, IN 46619

©2026 Wiring Device-Kellems. All rights reserved.
Hubbell and the Hubbell logo are registered trademarks or trademarks of Hubbell Incorporated. All other trademarks are the property of their respective owners.
HES-MULTI-CAT-EN-03988_A | 02/2026

A Hubbell brand collection