CATALOG

Weatherproof Boxes, Covers, and Lighting

Section D

Table of Contents

1-Gang Boxes

Metal 2-Gang Covers

Nonmetallic Ceiling Fan & Luminaire Boxes

BELL® Weatherproof Boxes, Covers & Lighting

- 1-Gang Boxes D-5
- 1-Gang Extensions & Adapters D-7
- Multigang Boxes & Extension D-9
- Round Splice Boxes & Extension Adapter. D-12
- Metal 1-Gang Device Covers D-13
- Metal 2-Gang Device Covers, Multiconfiguration. D-17
- Metal Locking Cover D-18
- Rayntite® Metal 2-Gang Covers. D-19
- Metal 2-Gang Covers. D-20
- Metal 3-Gang Covers. D-21
- Metal Device Covers Combos & Kits D-23
- Metal Covers. D-24
- Metal Decorator Switch Covers D-26
- Metal Toggle Switch Covers D-27
- Metal Lampholder/Cluster Covers. D-28
- Metal Lampholders D-29
- Metal Floodlights. D-31
- Metal Bullet Lampholder & Portable Lampholders. D-33
- Metal Lampholder Combos D-34
- Metal Light Kits D-35
- Metal Garden Lights D-36
- Weatherproof Accessories. D-37
- Nonmetallic Ceiling Fan & Luminaire Boxes. D-40
- Nonmetallic Boxes. D-41
- Nonmetallic Covers. D-42
- Nonmetallic Lighting. D-43
- Product Drawings D-44

Standards, 2020 National Electrical Code®

BELL® UPC Vendor Number 050169. Where applicable, BELL® products are engineered in accordance with the standards established by Underwriters Laboratories and the Canadian Standards Association. Dimensional data listed in this catalog is intended for general reference with broad tolerance limits.

2020 NEC®

When specifying BELL® Weatherproof boxes and covers, consult the requirements of the National Electrical Code®, Article 314.16 (B) and 406.9 (B). Article 314.16 (B) details the NEC® requirements for the maximum number of conductors allowed for a BELL® Weatherproof installation. Article 406.9 (B) provides details on the NEC® requirements for receptacles being used in wet locations.

For your convenience, we have reprinted the pertinent NEC® articles. In all cases, consult your local electrical code and inspector interpretation.

Wiring Capacity: BELL® Weatherproof Boxes and Extensions

Maximum Number of Conductors or Minimum Size Box (Article 314.16 (B))

The purpose of Section 314.16 (B) is to determine the maximum conductor count or the minimum box size required for the job. It also can be used to figure how many other conductors may be added without exceeding the Code-prescribed limit. Most applications have determined the number of conductors. The rules of Section 314.16 (B) are used to determine the Code recognized limit, or smallest box that may be installed.

Selection of any BELL® Weatherproof box or extension for use in any electrical circuit work must take into consideration the maximum number of wires permitted in the box. Safe electrical practice demands that wires not be jammed into boxes because of the possibility of nicks, abrasions, or other damage to the insulating material, creating the potential for ground faults or short circuits.

314.16 Number of Conductors in Outlet, Device, and Junction Boxes, and Conduit Bodies.

Boxes and conduit bodies shall be of an approved size to provide free space for all enclosed conductors. In no case shall the volume of the box, as calculated in 314.16(A), be less than the fill calculation as calculated in 314.16(B). The minimum volume for conduit bodies shall be as calculated in 314.16(C).

The provisions of this section shall not apply to terminal housings supplied with motors or generators.

Boxes and conduit bodies enclosing conductors 4 AWG or larger shall also comply with the provisions of 314.28. Outlet and device boxes shall also comply with 314.24.

(A) Box Volume Calculations.

The volume of a wiring enclosure (box) shall be the total volume of the assembled sections and, where used, the space provided by plaster rings, domed covers, extension rings, and so forth, that are marked with their volume or are made from boxes the dimensions of which are listed in Table 314.16(A). (1) Standard Boxes. The volumes of standard boxes that are not marked with their volume shall be as given in Table 314.16(A).

(2) Other Boxes. Boxes 1650 cm3 (100 in.3) or less, other than those described in Table 314.16(A), and nonmetallic boxes shall be durably and legibly marked by the manufacturer with their volume. Boxes described in Table 314.16(A) that have a volume larger than is designated in the table shall be permitted to have their volume marked as required by this section.

(B) Box Fill Calculations.

The volumes in paragraphs 314.16(B)(1) through (B)(5), as applicable, shall be added together. No allowance shall be required for small fittings such as locknuts and bushings. Each space within a box installed with a barrier shall be calculated separately.

(1) Conductor Fill. Each conductor that originates outside the box and terminates or is spliced within the box shall be counted once, and each conductor that passes through the box without splice or termination shall be counted once. Each loop or coil of unbroken conductor not less than twice the minimum length required for free conductors in 300.14 shall be counted twice. The conductor fill shall be calculated using Table 314.16(B). A conductor, no part of which leaves the box, shall not be counted.

Exception: An equipment grounding conductor or conductors or not over four fixture wires smaller than 14 AWG, or both, shall be permitted to be omitted from the calculations where they enter a box from a domed luminaire or similar canopy and terminate within that box.

(2) Clamp Fill. Where one or more internal cable clamps, whether factory or field supplied, are present in the box, a single volume allowance in accordance with Table 314.16(B) shall be made based on the largest conductor present in the box. No allowance shall be required for a cable connector with its clamping mechanism outside the box.

(3) Support Fittings Fill. Where one or more luminaire studs or hickeys are present in the box, a single volume allowance in

Standards, 2020 National Electrical Code®

accordance with Table 314.16(B) shall be made for each type of fitting based on the largest conductor present in the box.

(4) Device or Equipment Fill. For each yoke or strap containing one or more devices or equipment, a double volume allowance in accordance with Table 314.16(B) shall be made for each yoke or strap based on the largest conductor connected to a device(s) or equipment supported by that yoke or strap. A device or utilization equipment wider than a single 50 mm (2 in.) device box as described in Table 314.16(A) shall have double volume allowances provided for each gang required for mounting.

(5) Equipment Grounding Conductor Fill. Where up to four equipment grounding conductors or equipment bonding jumpers enter a box, a single volume allowance in accordance with Table 314.16(B) shall be made based on the largest equipment grounding conductor or equipment bonding jumper entering in the box. A 1/4 volume allowance shall be made for each additional equipment grounding conductor or equipment bonding jumper that enters the box, based on the largest equipment grounding conductor or equipment bonding conductor.

(C) Conduit Bodies.

(1) General. Conduit bodies enclosing 6 AWG conductors or smaller, other than short-radius conduit bodies as described in 314.16(C)(3), shall have a cross-sectional area not less than twice the cross-sectional area of the largest conduit or tubing to which they can be attached. The maximum number of conductors permitted shall be the maximum number permitted by Table 1 of Chapter 9 for the conduit or tubing to which it is attached.

(2) With Splices, Taps, or Devices. Only those conduit bodies that are durably and legibly marked by the manufacturer with their volume shall be permitted to contain splices, taps, or devices. The maximum number of conductors shall be calculated in accordance with 314.16(B). Conduit bodies shall be supported in a rigid and secure manner.

(3) Short Radius Conduit Bodies. Conduit bodies such as capped elbows and service-entrance elbows that enclose conductors 6 AWG or smaller, and are only intended to enable the installation of the raceway and the contained conductors, shall not contain splices, taps, or devices and shall be of an approved size to provide free space for all conductors enclosed in the conduit body.

406.9 Receptacles in Damp or Wet Locations.

(A) Damp Locations. A receptacle installed outdoors in a location protected from the weather or in other damp locations shall have an enclosure for the receptacle that is weatherproof when the receptacle is covered (attachment plug cap not inserted and receptacle covers closed).

An installation suitable for wet locations shall also be considered suitable for damp locations.

A receptacle shall be considered to be in a location protected from the weather where located under roofed open porches, canopies, marquees, and the like, and will not be subjected to a beating rain or water runoff. All 15- and 20-ampere, 125- and 250- volt nonlocking receptacles shall be a listed weather-resistant type.

Informational Note: The types of receptacles covered by this requirement are identified as 5-15, 5-20, 6-15, and 6-20 in ANSI/NEMA WD 6-2016, Wiring Devices — Dimensional Specifications.

(B) Wet Locations.

(1) Receptacles of 15 and 20 Amperes in a Wet Location. 15- and 20-ampere, 125- and 250-volt receptacles installed in a wet location shall have an enclosure that is weatherproof whether or not the attachment plug cap is inserted. An outlet box hood installed for this purpose shall be listed and shall be identified as "extra-duty." All 15- and 20- ampere, 125- and 250-volt nonlocking-type receptacles shall be listed weather-resistant type.

Informational Note No. 1: Requirements for extra-duty outlet box hoods are found in ANSI/UL 514D-2016, Cover Plates for Flush-Mounted Wiring Devices. Informational Note No. 2: The types of receptacles covered by this requirement are identified as 5-15, 5-20, 6-15, and 6-20 in ANSI/NEMA WD 6-2016, Wiring Devices — Dimensional Specifications.

Exception: 15- and 20-ampere, 125- through 250-volt receptacles installed in a wet location and subject to routine high-pressure spray washing shall be permitted to have an enclosure that is weatherproof when the attachment plug is removed.

(2) Other Receptacles. All other receptacles installed in a wet location shall comply with 406.9(B)(2)(a) or (B)(2)(b).

(A) A receptacle installed in a wet location, where the product intended to be plugged into it is not attended while in use, shall have an enclosure that is weatherproof with the attachment plug cap inserted or removed.

(B) A receptacle installed in a wet location where the product intended to be plugged into it will be attended while in use (e.g., portable tools) shall have an enclosure that is weatherproof when the attachment plug is removed.

(C) Bathtub and Shower Space. Receptacles shall not be installed within a zone measured 900 mm (3 ft) horizontally and 2.5 m (8 ft) vertically from the top of the bathtub rim or shower stall threshold. The identified zone is all-encompassing and shall include the space directly over the tub or shower stall.

(D) Protection for Floor Receptacles. Standpipes of floor

Standards, 2020 National Electrical Code®

receptacles shall allow floor-cleaning equipment to be operated without damage to receptacles.

(E) Flush Mounting with Faceplate. The enclosure for a receptacle installed in an outlet box flush-mounted in a finished surface shall be made weatherproof by means of a weatherproof faceplate assembly that provides a watertight connection between the plate and the finished surface.

GENERAL FEATURES AND BENEFITS

BELL® Weatherproof products all offer these features and benefits:

- Rugged seamless die cast construction that will not allow entry of moisture
- Reinforced connector outlets to provide a secure mechanical installation
- State-of-the-art powder coat paint for maximum weatherability and scratch resistance
- Bilingual instructions provided with every product
- Installation hardware and ground screws included where applicable
- Shrink-wrap packaging that keeps all components together
- UPC-A barcoding to help lower transaction costs

Refer to the pages that follow for more specific information about BELL® products.

National Electric Code® and NEC® is a registered Trademark of the National Fire Protection Association.

Calculate The Minimum Size Box

Section 314-16(B) describes in detail the method of counting wires, as well as clamps, fittings, or devices (i.e., switches, receptacles, combination devices) — by establishing an equivalent conductor-value for each. These values are added together to get a total number of conductors. The minimum size box is the smallest one in cubic inch size that can accommodate that number of conductors.

Points to Remember:

1. Up to 4 grounding wires entering a box, count a one volume allowance. A 1/4 volume allowance shall be made for each additional grounding conductor or bonding jumper that enters the box, based on the size of the largest grounding conductor.
2. Any wire running unbroken through the box counts as one wire.
3. Each wire coming into a splice device (crimp or twist-on type) is counted as one wire.
4. Each wire coming into the box and connecting to a device counts as one wire of that size.
5. Where devices are mounted in the box, the total conductor count must be increased by two for each mounting strap.

Table 314.16(B)
Volume Allowance Required per Conductor

Size of Conductor	Free Space Within Box for Each Conductor	
(AWG)	cm^3	$in.^3$
18	24.6	1.50
16	28.7	1.75
14	32.8	2.00
12	36.9	2.25
10	41.0	2.50
8	49.2	3.00
6	81.9	5.00

Example – BELL® Weatherproof

To calculate the minimum internal volume needed for an enclosure, to supply power to a single switch using #14/2 conductors, you must account for 2 conductors, one ground, and one switch, totaling 5 allowances. Table 314.16(B) of NFPA 70 National Electrical Code, states that multiplying 5 times 2.00 for the #14 conductors, will require a minimum of 10.0 cubic inches.

Die-Cast Aluminum Boxes

1-Gang

Applications

- For use in branch circuit wiring in wet, damp or dry locations
- May be used as a weatherproof junction box, or as a housing for receptacles, switches and GFCI's

Product Features

- Reinforced connector outlets
- Durable powder coat finish
- Included beveled corner mounting lugs provide for 24 different mounting positions
- Two closure plugs included
- Ground screw installed
- Multilingual instructions in each package
- Internal threads on hubs comply with NEMA requirements. Hubs accept all threaded fittings and threaded conduit

Compliance

- File E195978
- C22.2 No. 18
- FILE E212332*
- NEMA 3R

5320-0/5/9
5320-1/6
5320-2/7

SB350S

5324-0/5
5324-1

SB375S
SB375WH
SB375Z

5321-0/5/9
5321-1/6
5321-2

5330-0

SB475WH
SB475Z

Die-Cast Aluminum Boxes - 1-Gang

Catalog #	Cubic In. (cm3)	Description		Pkg. Type	Std. Pkg.	Bar Code
		Color	Outlets			
2" Deep, with Lugs – Three Threaded Outlets – 4-1/2" X 2-3/4"						
5320-0	18.3 (299.9)	Gray	(3) 1/2"	Shrink	20	IIIIIIII
5320-1	18.3 (299.9)	White	(3) 1/2"	Shrink	20	IIIIIIII
5320-2	18.3 (299.9)	Bronze	(3) 1/2"	Shrink	20	IIIIIIII
5320-5	18.3 (299.9)	Gray	(3) 1/2"	Carded	6	IIIIIIII
5320-6	18.3 (299.9)	White	(3) 1/2"	Carded	6	IIIIIIII
5320-7	18.3 (299.9)	Bronze	(3) 1/2"	Carded	6	IIIIIIII
5320-9	18.3 (299.9)	Gray	(3) 1/2"	Bulk	50	IIIIIIII
SB350S*	18.3 (299.9)	Gray	(3) 1/2"	Shrink	16	IIIIIIII
5324-0	18.3 (299.9)	Gray	(3) 3/4"	Shrink	20	IIIIIIII
5324-1	18.3 (299.9)	White	(3) 3/4"	Shrink	20	IIIIIIII
5324-5	18.3 (299.9)	Gray	(3) 3/4"	Carded	6	IIIIIIII
SB375S*	18.3 (299.9)	Gray	(3) 3/4"	Shrink	16	IIIIIIII
SB375WH*	18.3 (299.9)	White	(3) 3/4"	Shrink	16	IIIIIIII
SB375Z*	18.3 (299.9)	Bronze	(3) 3/4"	Shrink	16	IIIIIIII
2" Deep, with Lugs – Four Threaded Outlets – 4-1/2" X 2-3/4"						
5321-0	18.3 (299.9)	Gray	(4) 1/2"	Shrink	20	IIIIIIII
5321-1	18.3 (299.9)	White	(4) 1/2"	Shrink	20	IIIIIIII
5321-2	18.3 (299.9)	Bronze	(4) 1/2"	Shrink	20	IIIIIIII
5321-5	18.3 (299.9)	Gray	(4) 1/2"	Carded	6	IIIIIIII
5330-0	18.3 (299.9)	Gray	(4) 3/4"	Shrink	20	IIIIIIII
SB475WH*	18.3 (299.9)	White	(4) 3/4"	Shrink	16	IIIIIIII
SB475Z*	18.3 (299.9)	Bronze	(4) 3/4"	Shrink	16	IIIIIIII

*Notes: *FILE E212332.*

See end of section (Pg D44) for detailed drawings »

Die-Cast Aluminum Boxes

1-Gang

5322-0

SB550WH

5331-0

5323-0

5332-0

5385-0

SD350WH
SD350Z

5386-0

SD375WH
SD375Z

5387-0

SD450S

SD475S

Die-Cast Aluminum Boxes - 1-Gang

Catalog #	Cubic In. (cm3)	Description		Pkg. Type	Std. Pkg.	Bar Code
		Color	Outlets			
2″ Deep, with Lugs – Five Threaded Outlets – 4-1/2″ X 2-3/4″						
5322-0	18.3 (299.9)	Gray	(5) 1/2″	Shrink	20	IIIIIIII
SB550WH*	18.3 (299.9)	White	(5) 1/2″	Shrink	16	IIIIIIII
5331-0	18.3 (299.9)	Gray	(5) 3/4″	Shrink	20	IIIIIIII
2″ Deep, with Side Lugs – Five Threaded Outlets – 4-1/2″ X 2-3/4″						
5323-0	18.3 (299.9)	Gray	(5) 1/2″	Shrink	20	IIIIIIII
5332-0	18.3 (299.9)	Gray	(5) 3/4″	Shrink	20	IIIIIIII
2-5/8″ Deep, with Lugs – Three Threaded Outlets – 4-1/2″ X 2-3/4″						
5385-0	22.5 (368.7)	Gray	(3) 1/2″	Shrink	15	IIIIIIII
SD350WH*	23.8 (390)	White	(3) 1/2″	Shrink	10	IIIIIIII
SD350Z*	23.8 (390)	Bronze	(3) 1/2″	Shrink	10	IIIIIIII
5386-0	22.5 (368.7)	Gray	(3) 3/4″	Shrink	15	IIIIIIII
SD375WH*	23.8 (390)	White	(3) 3/4″	Shrink	10	IIIIIIII
SD375Z*	23.8 (390)	Bronze	(3) 3/4″	Shrink	10	IIIIIIII
5387-0	22.5 (368.7)	Gray	(3) 1″	Shrink	15	IIIIIIII
2-5/8″ Deep, with Lugs – Four Threaded Outlets – 4-1/2″ X 2-3/4″						
SD450S*	24.1 (394)	Gray	(4) 1/2″	Shrink	10	IIIIIIII
SD475S*	23.9 (391)	Gray	(4) 3/4″	Shrink	10	IIIIIIII

*Notes: *FILE E212332.*

See end of section (Pg D44) for detailed drawings »

Die-Cast Aluminum Extensions and Adapters

1-Gang

Applications

- Use to provide additional capacity needed for NEC box fill requirements
- Adapters allow installer to add "take-offs" to new boxes/devices

Product Features

- Installation hardware, gasket, and ground screw provided
- Closure plugs included with extensions with threaded outlets
- Internal threads and hubs comply with NEMA requirements. Hubs accept all threaded fittings and threaded conduit

Compliance

- File E195978
- C22.2 No. 18
- FILE E212332*
- NEMA 3R

5406-0

(No ground screw)

5399-0, 5403-0

(Includes one closure plug)

SE450S
SE450WH
SE450Z

(Includes four closure plugs)

5400-0/5, 5405-0

(Includes three closure plugs)

SE475S

(Includes four closure plugs)

Die-Cast Aluminum Extensions and Adapters - 1-Gang

Catalog #	Cubic In. (cm³)	Description		Pkg. Type	Std. Pkg.	Bar Code
		Color	Outlets			
Extension – 4-1/2" X 2-3/4" X 1" Deep						
5406-0	9.5 (155.7)	Gray	—	Shrink	25	IIIIIIII
Extension Adapters – 5-1/4" X 3-1/2" X 1-1/2" Deep – Two Threaded Outlets						
5399-0	9.5 (155.7)	Gray	(2) 1/2"	Shrink	20	IIIIIIII
5403-0	11.0 (180.3)	Gray	(2) 3/4"	Shrink	20	IIIIIIII
Extension Adapters – 5-1/4" X 3-1/2" X 1-1/2" Deep – Four threaded outlets						
SE450S*	17.3 (283.5)	Gray	(4) 1/2"	Shrink	6	IIIIIIII
SE450WH*	17.3 (283.5)	White	(4) 1/2"	Shrink	6	IIIIIIII
SE450Z*	17.3 (283.5)	Bronze	(4) 1/2"	Shrink	6	IIIIIIII
SE475S*	17.3 (283.5)	Gray	(4) 3/4"	Shrink	6	IIIIIIII
Extension Adapters – 5-1/4" X 3-1/2" X 1-1/2" Deep – Six Threaded Outlets						
5400-0	9.5 (155.7)	Gray	(6) 1/2"	Shrink	20	IIIIIIII
5400-5	9.5 (155.7)	Gray	(6) 1/2"	Carded	6	IIIIIIII
5405-0	11.0 (180.3)	Gray	(6) 3/4"	Shrink	20	IIIIIIII

*Notes: *FILE E212332.*

See end of section (Pg D44) for detailed drawings »

Die-Cast Aluminum Extensions and Adapters

1-Gang

Applications

- Used to provide additional capacity needed for NEC box fill requirements
- Allows installer to add "take-offs" to new boxes/devices

Product Features

- Unique swing-arm design speeds installation. Allows the installer better visibility when lining up and threading fasteners
- Rugged die-cast construction
- Reinforced connector outlets
- Durable powder coat finish
- Installation hardware, ground screw and gasket provided
- Multilingual instructions in each package
- Internal threads and hubs comply with NEMA requirements. Hubs accept all threaded fittings and threaded conduit

Compliance

- File E195978
- NEMA 3R

5412-0, 5413-0

(Includes one closure plug)

5414-0, 5415-0

(Includes three closure plugs)

Die-Cast Aluminum Extensions and Adapters - 1-Gang

Catalog #	Cubic In. (cm³)	Description		Pkg. Type	Std. Pkg.	Bar Code
		Color	Outlets			
Swing-Arm – Extension Adapters – 5-1/4″ X 3-1/2″ X 1-1/2″ Deep						
5412-0	13.8 (226.1)	Gray	(2) 1/2″	Shrink	10	IIIIIIII
5413-0	13.8 (226.1)	Gray	(2) 3/4″	Shrink	10	IIIIIIII
5414-0	12.8 (209.8)	Gray	(6) 1/2″	Shrink	10	IIIIIIII
5415-0	12.8 (209.8)	Gray	(6) 3/4″	Shrink	10	IIIIIIII

See end of section (Pg D44) for detailed drawings »

Die-Cast Aluminum Boxes

2-Gang

Applications

- For use in branch circuit wiring in wet, damp or dry locations
- May be used as a weatherproof junction box, or as a housing for receptacles, switches and GFCI's

Product Features

- Reinforced connector outlets
- Durable powder coat finish
- Included beveled corner mounting lugs provide for 24 different mounting positions
- Closure plugs included
- Ground screw installed
- Multilingual instructions in each package
- Internal threads on hubs comply with NEMA requirements. Hubs accept all threaded fittings and threaded conduit

Compliance

- File E195978
- C22.2 No. 18
- FILE E212332*
- NEMA 3R

5333-0

DB350WH
DB350Z

5341-0

DB375WH
DB375Z

5335-0

5343-0

5337-0/5
5337-1

5345-0

Die-Cast Aluminum Boxes - 2-Gang

Catalog #	Cubic In. (cm3)	Description		Pkg. Type	Std. Pkg.	Bar Code
		Color	Outlets			
2" Deep, with Lugs – Three Threaded Outlets – 4-1/2" X 4-1/2"						
5333-0	32.0 (524.4)	Gray	(3) 1/2"	Shrink	12	IIIIIIII
DB350WH*	33.8 (553.9)	White	(3) 1/2"	Shrink	9	IIIIIIII
DB350Z*	33.8 (553.9)	Bronze	(3) 1/2"	Shrink	9	IIIIIIII
5341-0	32.0 (524.4)	Gray	(3) 3/4"	Shrink	12	IIIIIIII
DB375WH*	33.0 (540.8)	White	(3) 3/4"	Shrink	9	IIIIIIII
DB375Z*	33.0 (540.8)	Bronze	(3) 3/4"	Shrink	9	IIIIIIII
2" Deep, with Lugs – Four Threaded Outlets – 4-1/2" X 4-1/2"						
5335-0	31.0 (508.0)	Gray	(4) 1/2"	Shrink	12	IIIIIIII
5343-0	31.0 (508.0)	Gray	(4) 3/4"	Shrink	12	IIIIIIII
2" Deep, with Lugs – Five Threaded Outlets – 4-1/2" X 4-1/2"						
5337-0	31.0 (508.0)	Gray	(5) 1/2"	Shrink	12	IIIIIIII
5337-1	31.0 (508.0)	White	(5) 1/2"	Shrink	12	IIIIIIII
5337-5	31.0 (508.0)	Gray	(5) 1/2"	Carded	4	IIIIIIII
5345-0	31.0 (508.0)	Gray	(5) 3/4"	Shrink	12	IIIIIIII

*Notes: *FILE E212332.*

See end of section (Pg D44) for detailed drawings »

Die-Cast Aluminum Boxes

2-Gang

5334-0, 5342-0

5340-0, 5348-0

5338-0, 5346-0

5388-0, 5389-0

DD575XS

DD5100XS

Die-Cast Aluminum Boxes - 2-Gang

Catalog #	Cubic In. (cm3)	Description		Pkg. Type	Std. Pkg.	Bar Code
		Color	Outlets			
2″ Deep, with Side Lugs – Five Threaded Outlets – 4-1/2″ X 4-1/2″						
5334-0	32.0 (524.4)	Gray	(5) 1/2″	Shrink	12	IIIIIIII
5342-0	32.0 (524.4)	Gray	(5) 3/4″	Shrink	12	IIIIIIII
2″ Deep, with Lugs – Seven Threaded Outlets – 4-1/2″ X 4-1/2″						
5340-0	30.2 (494.9)	Gray	(7) 1/2″	Shrink	12	IIIIIIII
5348-0	30.2 (494.9)	Gray	(7) 3/4″	Shrink	12	IIIIIIII
2″ Deep, with Side Lugs – Seven Threaded Outlets – 4-1/2″ X 4-1/2″						
5338-0	31.0 (508.0)	Gray	(7) 1/2″	Shrink	12	IIIIIIII
5346-0	31.0 (508.0)	Gray	(7) 3/4″	Shrink	12	IIIIIIII
2-5/8″ Deep, with Lugs – Five Threaded Outlets – 4-1/2″ X 4-1/2″						
5388-0	36.0 (589.9)	Gray	(5) 3/4″	Shrink	9	IIIIIIII
5389-0	36.0 (589.9)	Gray	(5) 1″	Shrink	9	IIIIIIII
2-5/8″ Deep, with Side Lugs – Five Threaded Outlets – 4-1/2″ X 4-1/2″						
DD575XS*	43.5 (712.8)	Gray	(5) 3/4″	Shrink	6	IIIIIIII
DD5100XS*	43.0 (704.6)	Gray	(5) 1″	Shrink	6	IIIIIIII

*Notes: *FILE E212332.*

See end of section (Pg D45) for detailed drawings »

Die-Cast Aluminum Box and Extension

2-Gang Extension

Applications

- Used to provide additional capacity needed for NEC box fill requirements

Product Features

- Rugged seamless construction
- Durable powder coat finish
- Installation hardware and gasket provided
- Multilingual instructions in each package

Compliance

- File E195978
- C22.2 No. 18
- NEMA 3R

5407-0

2-Gang Extension – 4-21/32″ X 4-21/32″ X 1-1/32″ Deep

Catalog #	Cubic In. (cm³)	Description		Pkg. Type	Std. Pkg.	Bar Code
		Color	Outlets			
5407-0	16.0 (262.2)	Gray	—	Shrink	10	IIIIIIII

3-Gang

Applications

- For use in branch circuit wiring in wet, damp or dry locations
- Can be used as a weatherproof junction box, or as a housing for receptacles, switches and GFCI's

Product Features

- Seamless die-cast aluminum construction
- Reinforced connector outlets
- Durable powder coat finish
- Included beveled corner mounting lugs provide for 24 different mounting positions
- Four closure plugs included
- Ground screws installed
- Multilingual instructions in each package
- Internal threads and hubs comply with NEMA requirements. Hubs accept all threaded fittings and threaded conduit

TB750S*

5390-0

TB7100S*

3-Gang Box – 2-5/8″ Deep, with Lugs – Seven Threaded Outlets 4-1/2″ X 6-3/8″

Catalog #	Cubic In. (cm³)	Description		Pkg. Type	Std. Pkg.	Bar Code
		Color	Outlets			
TB750S*	61 (999)	Gray	(7) 1/2″	Shrink	5	IIIIIIII
5390-0	55.0 (901.3)	Gray	(7) 3/4″	Boxed	1	IIIIIIII
TB7100S*	56.0 (917.7)	Gray	(7) 1″	Shrink	5	IIIIIIII

*Notes: *FILE E212332.*

Compliance

- File E195978
- C22.2 No. 18
- FILE E212332*
- NEMA 3R

See end of section (Pg D45) for detailed drawings »

Die-Cast Aluminum Round Splice Boxes and Extension Adapter

4″ Round Box

Applications

- For use in branch circuit wiring in wet, damp or dry locations
- Designed for use as a weatherproof junction box. May be used with BELL® round cluster covers and round lampholder combinations

Product Features

- Rugged die-cast construction
- Reinforced connector outlets
- Durable powder coat finish
- Cast-in mounting lugs provide fast, secure installation
- Includes four closure plugs, installed ground screw and multilingual instructions

Compliance

- File E195978
- C22.2 No. 18
- NEMA 3R

5361-0/5, 5372-0

5361-1/6

5361-2/7

4″ Round Splice Box – Five Threaded Outlets – 1-1/2″ Deep

Catalog #	Cubic In. (cm3)	Description		Pkg. Type	Std. Pkg.	Bar Code
		Color	Outlets			
5361-0	16.0 (262.2)	Gray	(5) 1/2″	Shrink	16	IIIIIIII
5361-1	16.0 (262.2)	White	(5) 1/2″	Shrink	16	IIIIIIII
5361-2	16.0 (262.2)	Bronze	(5) 1/2″	Shrink	16	IIIIIIII
5361-5	16.0 (262.2)	Gray	(5) 1/2″	Carded	6	IIIIIIII
5361-6	16.0 (262.2)	White	(5) 1/2″	Carded	6	IIIIIIII
5361-7	16.0 (262.2)	Bronze	(5) 1/2″	Carded	6	IIIIIIII
5372-0	16.0 (262.2)	Gray	(5) 3/4″	Shrink	16	IIIIIIII

Round Extension Adapters

Applications

- For use with 4″ round splice boxes
- Extension adapters are used to increase box capacity and allow the installer to add “take-offs” to new boxes/devices

Product Features

- Rugged die-cast construction
- Reinforced connector outlets
- Durable powder coat finish
- Includes installation hardware, closure plugs, gasket and multilingual instructions

Compliance

- File E195978
- C22.2 No. 18
- NEMA 3R

5363-0

4″ Round Extension Adapter – Four Threaded Outlets – 1-1/2″ Deep

Catalog #	Cubic In. (cm3)	Description		Pkg. Type	Std. Pkg.	Bar Code
		Color	Outlets			
5363-0	16.3 (267.1)	Gray	(4) 1/2″	Shrink	16	IIIIIIII

See end of section (Pg D45) for detailed drawings »

Multiconfiguration Flip Covers

Applications

- For use whenever weatherproof protection is required for an outdoor receptacle or switch

Product Features

- Heavy duty die-cast metal construction
- Quick-fit keyhole mounting system allows cover installation in under a minute
- Includes gasket and mounting hardware
- Universal Fit Adapter System Technology (U-Fast) comes pre-configured for GFCI
- Durable powder coat finish
- Horizontal or vertical mount
- Lockable tab (fits up to 1/8" shackle)

Compliance

- File E212332
- Meets NEC® 406.9 (A) Requirements
- NEMA 3R

12-in-1 Configurations

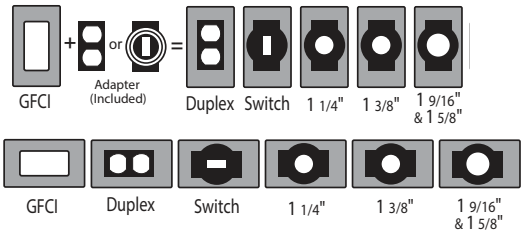

MX1250S
MX1250W
MX1250Z

Horizontal or Vertical Mount

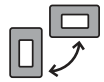

MX1050S
MX1050W
MX1050Z

MX1550S

14-in-1 Configurations

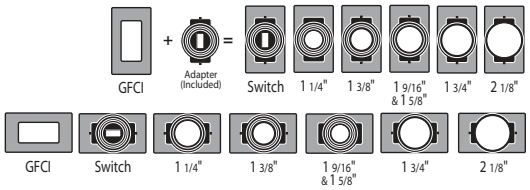

Horizontal or Vertical Mount

1-Gang Flip Covers

Catalog #	Description	Color	Pkg. Type	Std. Pkg.	Bar Code
MX1050S	Vertical/Horizontal	Gray	Shrink	20	IIIIIIII
MX1050W	Vertical/Horizontal	White	Shrink	20	IIIIIIII
MX1050Z	Vertical/Horizontal	Bronze	Shrink	20	IIIIIIII
MX1250S	Horizontal/Vertical	Gray	Shrink	20	IIIIIIII
MX1250W	Horizontal/Vertical	White	Shrink	20	IIIIIIII
MX1250Z	Horizontal/Vertical	Bronze	Shrink	20	IIIIIIII
MX1550S	Vertical/Horizontal Large Round and Twist Lock	Gray	Shrink	10	IIIIIIII

See end of section (Pg D46) for detailed drawings »

Metal 1-Gang Device Covers

Die-Cast Aluminum Rayntite® Covers

Applications

- For use whenever weatherproof protection is required for an outdoor receptacle

Product Features

- Rugged die-cast construction
- Durable powder coat finish provides maximum weatherability and scratch-resistance
- Self-closing lids assure weatherproof protection when the receptacle is not in use
- Vertical mount covers are padlockable (fits up to 3/16″ shackle)
- May be mounted to box or device
- Includes installation hardware, gasket and multilingual instruction

Compliance

- File 195978
- Meets NEC® 406.9 (A) Requirements
- NEMA 3R

5027-0

5028-0/5

5028-6

5031-0

5026-0

5029-0

5030-0

Metal 1-Gang Device Covers - Die-Cast Aluminum Rayntite Covers

Catalog #	Description	Color	Pkg. Type	Std. Pkg.	Bar Code
Vertical Mount – Device Covers					
5027-0	Duplex	Gray	Shrink	24	IIIIIIII
5028-0	GFCI	Gray	Shrink	24	IIIIIIII
5028-5	GFCI	Gray	Carded	6	IIIIIIII
5028-6	GFCI	White	Carded	6	IIIIIIII
Vertical Mount – Single Round Device Covers					
5031-0	1.4″ dia (mostly 15A)	Gray	Shrink	12	IIIIIIII
5026-0	1.59″ dia (mostly 20A)	Gray	Shrink	24	IIIIIIII
5029-0	1.71″ dia (mostly 30A)	Gray	Shrink	12	IIIIIIII
5030-0	2.15″ dia (mostly 30-50A)	Gray	Shrink	12	IIIIIIII

See end of section (Pg D46) for detailed drawings »

Metal 1-Gang Device Covers

Vertical Flip Covers

Applications

- For use whenever weatherproof protection is required for an outdoor receptacle

Product Features

- Rugged metallic construction
- Durable powder coat finish provides maximum weatherability and scratch-resistance
- Self-closing lids assure weatherproof protection when the receptacle is not in use
- Includes installation hardware, gasket and multilingual instructions

Compliance

- File E195978
- Meets NEC® 406.9 (A) Requirements
- NEMA 3R

5146-0/5

5146-1

5103-0/5

5103-1/6

5103-2

5155-0/5

5155-6

5095-0

Metal 1-Gang Device Covers - Vertical Flip Covers

Catalog #	Description	Color	Pkg. Type	Std. Pkg.	Bar Code
Device Mount					
5146-0	Duplex	Gray	Shrink	24	IIIIIIII
5146-1	Duplex	White	Shrink	24	IIIIIIII
5146-5	Duplex	Gray	Carded	6	IIIIIIII
5103-0	GFCI	Gray	Shrink	24	IIIIIIII
5103-1	GFCI	White	Shrink	24	IIIIIIII
5103-2	GFCI	Bronze	Shrink	24	IIIIIIII
5103-5	GFCI	Gray	Carded	6	IIIIIIII
5103-6	GFCI	White	Carded	6	IIIIIIII
5155-0	Single, 1.4″ diameter	Gray	Shrink	24	IIIIIIII
5155-5	Single, 1.4″ diameter	Gray	Carded	6	IIIIIIII
5155-6	Single, 1.4″ diameter	White	Carded	6	IIIIIIII
Box Mount					
5095-0	Duplex	Gray	Shrink	24	IIIIIIII

See end of section (Pg D46) for detailed drawings »

Metal 1-Gang Device Covers

Horizontal Flip Covers

Applications

- For use whenever weatherproof protection is required for an outdoor receptacle

Product Features

- Rugged metallic construction
- Durable powder coat finish provides maximum weatherability and scratch-resistance
- Self-closing lids assure weatherproof protection when the receptacle is not in use
- Includes installation hardware, gasket and multilingual instructions

Compliance

- File 195978
- Meets NEC® 406.9 (A) Requirements
- NEMA 3R

5180-0/5

5180-1/6

5180-2/7

5101-0/5
5101-1/6
5101-2/7

5102-0

5152-0

5153-0

5712-5WRTR

Device Mount

Catalog #	Description	Color	Pkg. Type	Std. Pkg.	Bar Code
5180-0	Duplex	Gray	Shrink	24	IIIIIIII
5180-1	Duplex	White	Shrink	24	IIIIIIII
5180-2	Duplex	Bronze	Shrink	24	IIIIIIII
5180-5	Duplex	Gray	Carded	6	IIIIIIII
5180-6	Duplex	White	Carded	6	IIIIIIII
5180-7	Duplex	Bronze	Carded	6	IIIIIIII
5101-0*	GFCI	Gray	Shrink	24	IIIIIIII
5101-1*	GFCI	White	Shrink	24	IIIIIIII
5101-2*	GFCI	Bronze	Shrink	24	IIIIIIII
5101-5*	GFCI	Gray	Carded	6	IIIIIIII
5101-6*	GFCI	White	Carded	6	IIIIIIII
5101-7*	GFCI	Bronze	Carded	6	IIIIIIII
5102-0	GFCI	Gray	Shrink	24	IIIIIIII
5152-0	Single, 1.4″ diameter	Gray	Shrink	24	IIIIIIII
5153-0	15A 125V Motor male plug base (fits up to 1.6″ diameter female plug connector)	Gray	Shrink	12	IIIIIIII
5712-5WRTR*	15A, 125V WR/TR Duplex receptacle included	Gray	Carded	6	IIIIIIII

*Notes: *C/UL Listed.*

See end of section (Pg D47) for detailed drawings »

Multiconfiguration 2-Gang Flip Covers

Applications

- For use whenever weatherproof protection is required for an outdoor receptacle or switch

Product Features

- Heavy duty die-cast metal construction
- Quick-Fit keyhole mounting system allows cover installation in under a minute
- Includes gasket and mounting hardware
- Universal Fit Adapter System Technology (U-Fast) comes pre-configured for GFCI
- Durable powdercoat finish
- Horizontal or vertical mount
- Lockable tab (fits up to 1/8" shackle)

Compliance

- File E212332
- Meets NEC® 406.9 (A) Requirements
- NEMA 3R

MX2050S

MX2050WH

MX2050Z

25-in-1 Configurations

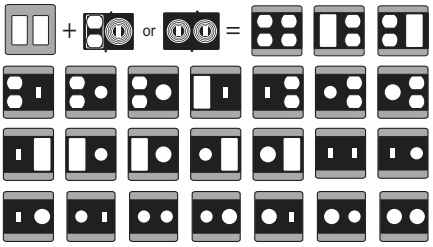

MX2150S

3-in-1 Configurations

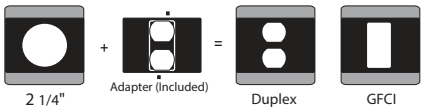

2-Gang Flip Covers

Catalog #	Description	Color	Pkg. Type	Std. Pkg.	Bar Code
MX2050S	2-Device 25-in-1	Gray	Shrink	6	IIIIIIII
MX2050WH	2-Device 25-in-1	White	Shrink	4	IIIIIIII
MX2050Z	2-Device 25-in-1	Bronze	Shrink	4	IIIIIIII
MX2150S	1-Device 3-in-1	Gray	Shrink	4	IIIIIIII

See end of section (Pg D47) for detailed drawings »

Metal Locking Cover

Heavy Duty Cast Flush Weatherproof Cover

Applications

- For use whenever weatherproof protection is required for an outdoor receptacle or switch
- Easily mounts to any 3-3/4", 4" or 4-11/16" square box

Product Features

- Heavy duty cast aluminum construction with durable enamel paint
- Cobra Cam lock, key removal in locked and unlocked positions
- 2 keys provided
- 4-in-1 configuration fits common device sizes including: duplex, decorator/GFCI, toggle switch, and round receptacle (2.125" Dia)
- Irradiation crosslinked polyethylene foam gasket
- Mounting hardware included
- Adapters included for various devices

Compliance

- File E212332
- Meets NEC® 406.9 (A) Requirements
- NEMA 3R

4-in-1 Configurations

Duplex | Decorator | 30 - 50 A (2.125" Dia.) | Toggle

4600RAC

1-Gang Locking Cover

Catalog #	Description	Color	Pkg. Type	Std. Pkg.	Bar Code
4600RAC	1-Device 4-in-1, Heavy duty, weatherproof	Gray	Boxed	1	IIIIIIII

See end of section (Pg D48) for detailed drawings »

Die-Cast Aluminum Rayntite® 2-Gang Covers

Applications

- For use whenever weatherproof protection is required for an outdoor receptacle

Product Features

- Rugged die-cast construction
- Durable powder coat finish provides maximum weatherability and scratch resistance
- Self-closing lids assure weatherproof protection when the receptacle is not in use
- Covers are padlockable (fits up to 3/16" shackle)
- May be mounted to box or device
- Includes installation hardware, gasket and multilingual instructions

Compliance

- File E195978
- Meets NEC® 406.9 (A) Requirements
- NEMA 3R

5033-0

5034-0

5036-0

5043-0

5045-0

Rayntite Vertical Mount – Device Covers

Catalog #	Description	Color	Pkg. Type	Std. Pkg.	Bar Code
5033-0	(1) Duplex & (1) GFCI	Gray	Shrink	6	IIIIIIII
5034-0	Single 2.6" dia (mostly 60A)	Gray	Shrink	6	IIIIIIII
5036-0	Single 2.15" dia (mostly 30-50A)	Gray	Shrink	6	IIIIIIII
5043-0	(1) Toggle & (1) GFCI	Gray	Shrink	6	IIIIIIII
5045-0	(2) GFCI	Gray	Shrink	6	IIIIIIII

See end of section (Pg D48) for detailed drawings »

Metal 2-Gang Device Covers

2-Gang Flip Covers

Applications

- For use whenever weatherproof protection is required for an outdoor receptacle

Product Features

- Rugged metallic construction
- Durable powder coat finish provides maximum weatherability and scratch resistance
- Self-closing lids assure weatherproof protection when the receptacle is not in use
- Includes installation hardware, gasket and multilingual instructions

Compliance

- File E195978
- Meets NEC® 406.9 (A) Requirements
- NEMA 3R

5148-0/5

5157-0

5145-0

Metal 2-Gang Device Covers - 2-Gang Flip Covers

Catalog #	Description	Color	Pkg. Type	Std. Pkg.	Bar Code
Device Mount					
5148-0	(2) Duplex	Gray	Shrink	18	IIIIIIII
5148-5	(2) Duplex	Gray	Carded	4	IIIIIIII
5157-0	(2) Single, 1.4″ dia.	Gray	Shrink	18	IIIIIIII
Box Mount					
5145-0	(2) GFCI	Gray	Shrink	10	IIIIIIII

See end of section (Pg D48) for detailed drawings »

Multiconfiguration 3-Gang Flip Cover

Applications

- For use whenever weatherproof protection is required for an outdoor receptacle or switch

Product Features

- Heavy duty die-cast metal construction
- Quick-Fit keyhole mounting system allows cover installation in under a minute
- Includes gasket and mounting hardware
- Universal Fit Adapter System Technology (U-Fast) for 125-in-1 custom device configurations, comes pre-configured for GFCI
- Durable powder coat finish
- Horizontal or vertical mount
- Lockable tab (fits up to 3/16″ shackle)

Compliance

- File E212332
- Meets NEC® 406.9 (A) Requirements
- NEMA 3R

25-in-1 Configurations

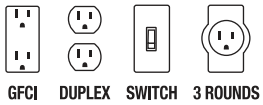

MX3050S

3-Gang Flip Covers

Catalog #	Description	Color	Pkg. Type	Std. Pkg.	Bar Code
MX3050S	3-Device 125-in-1	Gray	Shrink	5	IIIIIIII

See end of section (Pg D48) for detailed drawings »

Metal 3-Gang Device Covers

Box Mount 3-Gang Flip Cover

Applications

- For use whenever weatherproof protection is required for an outdoor receptacle

Product Features

- Rugged metallic construction
- Durable powder coat finish provides maximum weatherability and scratch resistance
- Self-closing lids assure weatherproof protection when the receptacle is not in use
- Includes installation hardware, gasket and multilingual instructions

Compliance

- File E195978
- Meets NEC® 406.9 (A) Requirements
- NEMA 3R

5093-0

3-Gang Flip Covers

Catalog #	Description	Color	Pkg. Type	Std. Pkg.	Bar Code
5093-0	(3) Single, 1.4″ dia.	Gray	Boxed	1	IIIIIIII

See end of section (Pg D49) for detailed drawings »

Flip Cover Combos and Complete Kits

Applications

- Receptacle and metal cover combos for use whenever weatherproof protection is required in wet, damp, or dry location

Product Features

- Includes weather-resistant receptacle with weatherproof flip cover and box
- Heavy duty die-cast metal construction
- Includes gasket and mounting hardware
- Durable powder coat finish
- Lockable tab (see cover listings for shackle dia.)
- Each kit is a convenient, complete weatherproof installation – no need to purchase separate components

Compliance

- File E313240 (5839 series)
- File E346152 (5874 series)
- Meets NEC® 406.9 (A) Requirements
- NEMA 3R

5874-5S
5874-6S

5839-5WRTR
5839-6WRTR
5839-7WRTR

Metal Device Cover Combos and Kits - Flip Cover Combos and Complete Kits

Catalog #	Description	Color	Pkg. Type	Std. Pkg.	Bar Code
Complete Flip Cover Kits					
5839-5WRTR	Flip Cover, WR/TR Duplex, (3) 1/2" Outlet Box	Gray	Box	4	IIIIIIII
5839-6WRTR	Flip Cover, WR/TR Duplex, (3) 1/2" Outlet Box	White	Box	4	IIIIIIII
5839-7WRTR	Flip Cover, WR/TR Duplex, (3) 1/2" Outlet Box	Bronze	Box	4	IIIIIIII
5874-5S	Flip Cover, WR/TR Self-test Hubbell 15A GFCI, (3) 1/2" Outlet Box	Gray	Box	4	IIIIIIII
5874-6S	Flip Cover, WR/TR Self-test Hubbell 15A GFCI, (3) 1/2" Outlet Box	White	Box	4	IIIIIIII

See end of section (Pg D49) for detailed drawings »

Metal Covers

Metal Box Covers

Applications

- For use whenever weatherproof protection is required for an outdoor receptacle

Product Features

- Rugged metallic construction
- Durable powder coat finish provides maximum weatherability and scratch resistance
- Includes installation hardware, gasket and multilingual instructions

Compliance

- File E195978
- Meets NEC® 406.9 (A) Requirements
- NEMA 3R

5173-0/5

5173-1/6

5173-2/7

5174-0

5175-0/5
5175-1
5175-2

5177-0

Metal Covers - Metal Box Covers

Catalog #	Description	Color	Pkg. Type	Std. Pkg.	Bar Code
1-Gang Blank Covers - Device Mount					
5173-0	Blank Cover	Gray	Shrink	50	IIIIIIII
5173-1	Blank Cover	White	Shrink	50	IIIIIIII
5173-2	Blank Cover	Bronze	Shrink	50	IIIIIIII
5173-5	Blank Cover	Gray	Carded	12	IIIIIIII
5173-6	Blank Cover	White	Carded	12	IIIIIIII
5173-7	Blank Cover	Bronze	Carded	12	IIIIIIII
1-Gang Blank Covers - Box Mount					
5174-0	Blank Cover	Gray	Shrink	50	IIIIIIII
2-Gang Blank Covers - Device Mount					
5175-0	Blank Cover	Gray	Shrink	25	IIIIIIII
5175-1	Blank Cover	White	Shrink	25	IIIIIIII
5175-2	Blank Cover	Bronze	Shrink	25	IIIIIIII
5175-5	Blank Cover	Gray	Carded	6	IIIIIIII
3-Gang Blank Covers - Box Mount (5390-0)					
5177-0	Blank Cover	Gray	Boxed	10	IIIIIIII

See end of section (Pg D49) for detailed drawings »

Round Box Covers

Applications

- For use with 4″ round splice boxes

Product Features

- Rugged metallic construction
- Durable powder coat finish
- Includes installation hardware, gasket and multilingual instructions

Compliance

- File E195978
- NEC® Compliant
- NEMA 3R

5374-0

5374-1

5374-2

4″ Round Cover

Catalog #	Description	Color	Pkg. Type	Std. Pkg.	Bar Code
5374-0	Round, Blank Cover	Gray	Shrink	30	IIIIIIII
5374-1	Round, Blank Cover	White	Shrink	20	IIIIIIII
5374-2	Round, Blank Cover	Bronze	Shrink	20	IIIIIIII

Round Closure Plates

Applications

- Use in dry locations for closure of unused ceiling outlets

Product Features

- Rugged metallic construction
- Durable powder coat paint finish provides a scratch-resistant surface

Compliance

- File E195978

5652-1

5653-1

5654-1

5″ Round Closure Plates – Steel

Catalog #	Description	Color	Pkg. Type	Std. Pkg.	Bar Code
5652-1	Screw & universal mount strap	Off White	Shrink	10	IIIIIIII
5653-1	(2) 8 - 32 screws, direct mount to fixture outlet box	Off White	Shrink	10	IIIIIIII
5654-1	Fixture stud & universal mount strap	Off White	Shrink	10	IIIIIIII

See end of section (Pg D50) for detailed drawings »

Metal Rocker Switch Covers

Metal Decorator Switch Covers

Applications

- A convenient and stylish switch for BBQ island, patio, deck, exterior walls, pool and spa and more

Product Features

- Convenient on/off polycarbonate rocker switch
- Internal elastomer membrane
- Compatible with single pole or 3-way decorator switches

Compliance

- File E116141
- NEC® Compliant
- NEMA 3R

Outdoor Comforts™
Enhance Your Outdoor Space!

5122-0*

5123-0

5123-1

5123-2

5127-0

5127-1

5127-2

5129-0

5129-1

5129-2

Receptacle / Flip Cover Combos

Catalog #	Description	Color	Pkg. Type	Std. Pkg.	Bar Code
5122-0	Weatherproof Decorator Switch Cover and Switch*	Gray	Clamshell	6	IIIIIIII
5123-0	Weatherproof Decorator Switch Cover	Gray	Shrink	10	IIIIIIII
5123-1	Weatherproof Decorator Switch Cover	White	Shrink	10	IIIIIIII
5123-2	Weatherproof Decorator Switch Cover	Bronze	Shrink	10	IIIIIIII
5127-0	2-Gang Weatherproof Decorator Switch Cover	Gray	Shrink	6	IIIIIIII
5127-1	2-Gang Weatherproof Decorator Switch Cover	White	Shrink	6	IIIIIIII
5127-2	2-Gang Weatherproof Decorator Switch Cover	Bronze	Shrink	6	IIIIIIII
5129-0	3-Gang Weatherproof Decorator Switch Cover	Gray	Shrink	2	IIIIIIII
5129-1	3-Gang Weatherproof Decorator Switch Cover	White	Shrink	2	IIIIIIII
5129-2	3-Gang Weatherproof Decorator Switch Cover	Bronze	Shrink	2	IIIIIIII

** 15A 120/277 VAC single pole polycarbonate decorator switch included.*

See end of section (Pg D50) for detailed drawings »

Metal Toggle Switch Covers

Applications

- For use whenever weatherproof protection is required for an "on-off" type switch

Product Features

- Rugged metallic construction
- Durable powder coat finish provides maximum weatherability and scratch resistance.
- Includes mounting screws, ferrules (inset spacers for low profile covers), gasket and multilingual instructions
- Kits include switch(es) configured for specific toggle cover use – no need to purchase separate components

Compliance

- File E195978
- C22.2 No. 18
- FILE E212332 (TC100)
- NEC® Compliant
- NEMA 3R

TC100S
TC100WH
TC100Z

5125-0

5167-0

5121-0/5
5121-1

5141-0/5, 5128-0, 5137-0

5124-0/5

5166-0WRTR , 5166-5WRTR

5126-0

Metal Toggle Switch Covers

Catalog #	Description	Color	Pkg. Type	Std. Pkg.	Bar Code
Toggle Switch Covers					
TC100S	1-Gang	Gray	Shrink	10	IIIIIIII
TC100WH	1-Gang	White	Shrink	10	IIIIIIII
TC100Z	1-Gang	Bronze	Shrink	10	IIIIIIII
5125-0	2-Gang	Gray	Shrink	8	IIIIIIII
5167-0	Combo Toggle and GFCI/Decorator Cover	Gray	Shrink	8	IIIIIIII
1-Gang Covers with Devices					
5121-0	Single Pole 15A 125V	Gray	Shrink	24	IIIIIIII
5121-1	Single Pole 15A 125V	White	Shrink	24	IIIIIIII
5121-5	Single Pole 15A 125V	Gray	Carded	6	IIIIIIII
5141-0	3-Way 125V, 6A or 250V, 3A	Gray	Shrink	8	IIIIIIII
5141-5	3-Way 125V, 6A or 250V, 3A	Gray	Carded	6	IIIIIIII
5128-0	Single Pole 20A 120-277VAC	Gray	Shrink	20	IIIIIIII
5137-0	Double Pole 20A 120-277VAC	Gray	Shrink	20	IIIIIIII
2-Gang Covers with Devices					
5124-0	(2) Single Pole 15A 125V	Gray	Shrink	8	IIIIIIII
5124-5	(1) Single Pole & (1) 3-Way 15A 125V	Gray	Carded	4	IIIIIIII
5166-0WRTR	(1) Single Pole 15A 125V & (1) WR/TR Duplex	Gray	Shrink	8	IIIIIIII
5166-5WRTR	(1) Single Pole 15A 125V & (1) WR/TR Duplex	Gray	Carded	4	IIIIIIII
3-Gang Cover with Devices					
5126-0	(3) Single Pole 15A 125V	Gray	Boxed	1	IIIIIIII

See end of section (Pg D51) for detailed drawings »

Die-Cast Lampholder/Cluster Covers

Applications

- For use with 1-Gang rectangular or round weatherproof boxes
- Cluster covers provide an easy means of mounting lampholders and other accessories

Product Features

- Rugged die-cast construction
- Durable powder coat finish provides maximum weatherability and scratch-resistance
- Includes installation hardware, gasket and multilingual instructions
- Three-hole covers are supplied with two closure plugs

Compliance

- File E195978
- NEC® Compliant
- NEMA 3R

5186-0/5
5186-1/6
5186-2/7

5189-0/5
5189-1/6
5189-2/7

5193-0/5
5193-1/6
5193-2/7

5197-0/5
5197-1/6
5197-2/7

Die-Cast Lampholder/Cluster Covers

Catalog #	Description	Color	Pkg. Type	Std. Pkg.	Bar Code
Rectangular Cluster Covers					
5186-0	(1) 1/2″ Outlet	Gray	Shrink	20	IIIIIIII
5186-1	(1) 1/2″ Outlet	White	Shrink	20	IIIIIIII
5186-2	(1) 1/2″ Outlet	Bronze	Shrink	20	IIIIIIII
5186-5	(1) 1/2″ Outlet	Gray	Carded	6	IIIIIIII
5186-6	(1) 1/2″ Outlet	White	Carded	6	IIIIIIII
5186-7	(1) 1/2″ Outlet	Bronze	Carded	6	IIIIIIII
5189-0	(3) 1/2″ Outlets	Gray	Shrink	20	IIIIIIII
5189-1	(3) 1/2″ Outlets	White	Shrink	20	IIIIIIII
5189-2	(3) 1/2″ Outlets	Bronze	Shrink	20	IIIIIIII
5189-5	(3) 1/2″ Outlets	Gray	Carded	6	IIIIIIII
5189-6	(3) 1/2″ Outlets	White	Carded	6	IIIIIIII
5189-7	(3) 1/2″ Outlets	Bronze	Carded	6	IIIIIIII
4″ Round Cluster Covers					
5193-0	(1) 1/2″ Outlet	Gray	Shrink	20	IIIIIIII
5193-1	(1) 1/2″ Outlet	White	Shrink	20	IIIIIIII
5193-2	(1) 1/2″ Outlet	Bronze	Shrink	20	IIIIIIII
5193-5	(1) 1/2″ Outlet	Gray	Carded	6	IIIIIIII
5193-6	(1) 1/2″ Outlet	White	Carded	6	IIIIIIII
5193-7	(1) 1/2″ Outlet	Bronze	Carded	6	IIIIIIII
5197-0	(3) 1/2″ Outlets	Gray	Shrink	20	IIIIIIII
5197-1	(3) 1/2″ Outlets	White	Shrink	20	IIIIIIII
5197-2	(3) 1/2″ Outlets	Bronze	Shrink	20	IIIIIIII
5197-5	(3) 1/2″ Outlets	Gray	Carded	6	IIIIIIII
5197-6	(3) 1/2″ Outlets	White	Carded	6	IIIIIIII
5197-7	(3) 1/2″ Outlets	Bronze	Carded	6	IIIIIIII

See end of section (Pg D51) for detailed drawings »

Die-Cast Lampholders

CFL and LED Compatible

Applications

- For outdoor or indoor lighting use
- Installs into lampholder/cluster covers or junction boxes with 1/2″ threaded outlets

Product Features

- Rugged metallic construction
- Durable powder coat finish provides maximum weatherability and scratch-resistance
- Serrated locking knuckle assures positive lamp positioning and provides pinpoint directional aiming
- Extra long wire leads for easy hook-up
- Each lampholder supplied with a porcelain socket, 1/2″ locknut and multilingual instructions

Compliance

- File E195978
- NEC® Compliant
- NEMA 3R

5606-0/5

5606-1/6

5606-2/7

5612-0

5611-0

5613-0

5820-8

Die-Cast Lampholders

Catalog #	Description	Color	Pkg. Type	Std. Pkg.	Bar Code
Lampholders and Accessories for 150W max. PAR38 Bulbs					
5606-0	Lampholder w/ interior gasket	Gray	Shrink	30	IIIIIIII
5606-1	Lampholder w/ interior gasket	White	Shrink	30	IIIIIIII
5606-2	Lampholder w/ interior gasket	Bronze	Shrink	30	IIIIIIII
5606-5	Lampholder w/ interior gasket	Gray	Carded	6	IIIIIIII
5606-6	Lampholder w/ interior gasket	White	Carded	6	IIIIIIII
5606-7	Lampholder w/ interior gasket	Bronze	Carded	6	IIIIIIII
5612-0	Lampholder w/ exterior gasket	Gray	Shrink	30	IIIIIIII
5611-0	Replacement gasket for 5612-0	–	Polybag	15	IIIIIIII
5613-0	Architectural Lampholder w/ interior gasket and visor	Gray	Shrink	4	IIIIIIII
Bullet Lampholders - for 150W max. PAR38 and R30 Bulbs					
5820-8	Lampholder w/ visor and heavy duty glass lens	Green	Boxed	2	IIIIIII

See end of section (Pg D52) for detailed drawings »

Die-Cast Lampholders

Swivel Joint Lampholders

Applications

- Use to add directional light outdoors for added safety and convenience
- Installs into lampholder/cluster covers or junction boxes with 1/2" threaded outlets

Product Features

- Superior commercial quality die-cast metal construction
- Premium powder coat finish
- LTS100 include porcelain sockets and external weatherproof gaskets. LED and CFL compatible
- LHS uses halogen bulb which last up to 3 times longer and produce almost 50% more light than incandescent bulbs
- No-tool easy-mount feature
- Locking swivel joint assures positive lamp positioning and easy pinpoint directional aiming

Compliance

- File E310337
- NEC® Compliant
- NEMA 3R

Multidirectional Swivel Joint

Halogen

LHS100S

LHS100W

LHS100Z

HB75W

LTS100S

LTS100WH

LTS100Z

CFL and LED Compatible

Die-Cast Lampholders - Swivel Joint Lampholders

Catalog #	Description	Color	Pkg. Type	Std. Pkg.	Bar Code
120V Halogen Swivel Lampholder					
LHS100S	75W 1,300 Lumen, Dimmable (T4 GY8.6 Bulb Included)	Gray	Shrink	6	IIIIIIII
LHS100W	75W 1,300 Lumen, Dimmable (T4 GY8.6 Bulb Included)	White	Shrink	6	IIIIIIII
LHS100Z	75W 1,300 Lumen, Dimmable (T4 GY8.6 Bulb Included)	Bronze	Shrink	6	IIIIIIII
Halogen Replacement Bulb					
HB75W	75W T4 Halogen, 1300 Lumen Dimmable (GY8.6 base)	—	Poly Bag	1	IIIIIIII
Traditional LED / CFL PAR38 Swivel Lampholder					
LTS100S	Uses PAR38 Bulb (150W Maximum, Not Included)	Gray	Shrink	10	IIIIIIII
LTS100WH	Uses PAR38 Bulb (150W Maximum, Not Included)	White	Shrink	10	IIIIIIII
LTS100Z	Uses PAR38 Bulb (150W Maximum, Not Included)	Bronze	Shrink	10	IIIIIIII

See end of section (Pg D52) for detailed drawings »

LED Swivel Floodlights

Applications

- Use to add directional light outdoors for added safety and convenience
- Installs into lampholder/cluster covers or junction boxes with 1/2" threaded outlets

Product Features

- LED's use significantly less energy
- 800-1000 lumens equivalent to 60W incandescent
- 1200 lumens equivalent to 75W incandescent
- 1600 lumens equivalent to 100W incandescent
- 3000K (warm white): Warm light tone that blends well with traditional lighting. Considered more relaxing and easier on the eyes than cool white or blue-white lighting.
- Die-cast aluminum with durable powder coat finish
- Patented swivel joint models provide easy light aiming and unlimited adjustment
- Ball joint models provide easy light aiming and finger screw tightening
- Long life - up to 50,000 hours
- 0-10V dimming allows for a single 0-10V dimmer to efficiently control multiple lights eliminating maximum total wattage limitations of conventional dimmer switches (LL1251W and LL1251Z).
- 120/277VAC 50/60Hz (LL800 is 120VAC)

Compliance

- NEC and NEMA 3R
- DLC 5.1 LISTED (LL1251W, LL1251Z)

DLC LISTED

LED
COMMERCIAL GRADE

Multidirectional Swivel Joint

Warm White
LED
3000K

Dimmable LED 3000K (Warm White) Commericial Grade Flood Lights

Catalog #	Description	Color	Pkg. Type	Std. Pkg.	Bar Code
LL1251W	Dimmable 1600 Lumen 13W with Locking Swivel Joint Adjustment	White	Box	4	IIIIIIII
LL1251Z	Dimmable 1600 Lumen 13W with Locking Swivel Joint Adjustment	Bronze	Box	4	IIIIIIII
LED 3000K (Warm White) Commercial Grade Flood Lights					
LL1200S	1200 Lumen 13W with Locking Swivel Joint Adjustment	Gray	Box	4	IIIIIIII
LL1200W	1200 Lumen 13W with Locking Swivel Joint Adjustment	White	Box	4	IIIIIIII
LL1200Z	1200 Lumen 13W with Locking Swivel Joint Adjustment	Bronze	Box	4	IIIIIIII
LED 3000K (Warm White) Flood Lights					
LLS1000S	1000 Lumen 12W with Ball Joint Adjustment	Gray	Box	4	IIIIIIII
LLS1000W	1000 Lumen 12W with Ball Joint Adjustment	White	Box	4	IIIIIIII
LLS1000Z	1000 Lumen 12W with Ball Joint Adjustment	Bronze	Box	4	IIIIIIII
LL800S	800 Lumen 8W with Swivel Joint Adjustment	Gray	Box	4	IIIIIIII
LL800W	800 Lumen 8W with Swivel Joint Adjustment	White	Box	4	IIIIIIII
LL800Z	800 Lumen 8W with Swivel Joint Adjustment	Bronze	Box	4	IIIIIIII

See end of section (Pg D52) for detailed drawings »

Die-Cast Led Floodlights

LED Flood Light Kits

Applications

- Use to add directional light outdoors for added safety and convenience
- Outdoor use in wet locations

Product Features

- LED's use significantly less energy
- 2000 lumens equivalent to 120W incandescent
- 3000K (warm white): Warm light tone that blends well with traditional lighting. Considered more relaxing and easier on the eyes than cool white or blue-white lighting.
- Die-cast aluminum with durable powder coat finish
- Patented swivel joint models provide easy light aiming and unlimited adjustment
- Ball joint models provide easy light aiming and finger screw tightening
- 180° Motion sensor models include duration, sensitivity and photocell control
- Long life - up to 50,000 hours
- 120VAC 50/60Hz

Compliance

- NEC and NEMA 3R

LLK2000S

LLK2000W

LLK2000Z

5882-5

5882-6

5882-7

LED

COMMERCIAL GRADE

180°

LED 3000K (Warm White) Outdoor Flood Light Kits

LLK2000S	2000 Lumen 24W includes Round Box	Gray	Box	2	IIIIIIII
LLK2000W	2000 Lumen 24W includes Round Box	White	Box	2	IIIIIIII
LLK2000Z	2000 Lumen 24W includes Round Box	Bronze	Box	2	IIIIIIII
5882-5	2000 Lumen 26W with Motion Sensor	Gray	Box	4	IIIIIIII
5882-6	2000 Lumen 26W with Motion Sensor	White	Box	4	IIIIIIII
5882-7	2000 Lumen 26W with Motion Sensor	Bronze	Box	4	IIIIIIII

See end of section (Pg D52) for detailed drawings »

Portable Metal Lampholders

Applications

- For general outdoor lighting use in wet, damp or dry locations

Product Features

- Rugged die-cast construction
- Durable powder coat finish provides maximum weatherability and scratch-resistance
- Locking swivel joint or serrated knuckle assures positive lamp positioning and provides pin-point directional aiming
- Integrated LEDs are rated for 50,000 hours

Compliance

- FILE E195978
- File E464683 (SPLED7Z)
- FILE E195978 (5792-0)
- NEC® Compliant
- NEMA 3R

Portable Metal Spike Lights

Catalog #	Description	Color	Pkg. Type	Std. Pkg.	Bar Code
Energy Efficient LED Spike Lights					
SPLED7Z	7 Watts Warm White LED 500 Lumens w/ 4 ft. cord	Bronze	Box	4	IIIIIIII
SPLED2Z	6.5 Watts Warm White LED 350 Lumens	Bronze	Box	4	IIIIIIII
SPLED500Z	9 Watts Warm White LED 540 Lumens	Bronze	Box	4	IIIIIIII
Lampholder Stakes for 150W max. PAR38 Bulbs					
SL101B	Portable Lampholder w/ exterior gasket	Bronze	Clamshell	10	IIIIIIII
5792-0	Portable Lampholder w/ interior gasket and 6 ft. cord	Gray	Polybag	12	IIIIIIII

See end of section (Pg D53) for detailed drawings »

Die-Cast Lampholder Combinations

Applications

- For use with BELL® 1-Gang rectangular or round weatherproof boxes

Product Features

- Rugged metallic construction
- Durable powder coat finish provides maximum weatherability and scratch-resistance
- Each combination kit is a complete weatherproof installation – no need to purchase separate components
- Includes installation hardware, gasket and multilingual instructions

Compliance

- File E225082
- NEC® Compliant
- NEMA 3R

5620-5

5621-0/5
5621-6

5624-0/5
5624-1/6

CFL and LED Compatible

5625-0/5
5625-1/6
5625-2/7

Die-Cast Lampholder Combinations

Catalog #	Description	Color	Pkg. Type	Std. Pkg.	Bar Code
Rectangular Cover and Lampholders for 150W max. PAR38 Bulbs					
5620-5	(1) Lampholder	Gray	Carded	4	IIIIIIII
5621-0	(2) Lampholders	Gray	Shrink	8	IIIIIIII
5621-5	(2) Lampholders	Gray	Carded	4	IIIIIIII
5621-6	(2) Lampholders	White	Carded	4	IIIIIII
4" Round Cover and Lampholders for 150W max. PAR38 Bulbs					
5624-0	(1) Lampholder	Gray	Shrink	8	IIIIIIII
5624-1	(1) Lampholder	White	Shrink	8	IIIIIIII
5624-5	(1) Lampholder	Gray	Carded	4	IIIIIII
5624-6	(1) Lampholder	White	Carded	4	IIIIIIII
5625-0	(2) Lampholders	Gray	Shrink	8	IIIIIIII
5625-1	(2) Lampholders	White	Shrink	8	IIIIIIII
5625-2	(2) Lampholders	Bronze	Shrink	8	IIIIIII
5625-5	(2) Lampholders	Gray	Carded	4	IIIIIIII
5625-6	(2) Lampholders	White	Carded	4	IIIIIIII
5625-7	(2) Lampholders	Bronze	Carded	4	IIIIIIII

See end of section (Pg D53) for detailed drawings »

Complete Light Kits

Applications

- For general lighting use in wet, damp or dry locations

Product Features

- Each kit is a complete weatherproof installation including a weatherproof junction box - no need to purchase separate components
- Each kit includes easy-to-follow multilingual instructions
- Kits with photocell provides for automatic dusk to dawn operation

Compliance

- File E225082
- NEC® Compliant
- NEMA 3R

5883-5

5818-5
5818-6

5829-5
5829-6
5829-10

5841-5

Light Kits

Catalog #	Description	Color	Pkg. Type	Std. Pkg.	Bar Code
Rectangular Light Kits for 150W max. PAR38 Bulbs					
5883-5	Box, cover, photocell & (2) lampholders	Gray	Boxed	4	IIIIIIII
5818-5	Box, cover & (2) lampholders	Gray	Boxed	4	IIIIIIII
5818-6	Box, cover & (2) lampholders	White	Boxed	4	IIIIIIII
4" Round Light Kits for 150W max. PAR38 Bulbs					
5829-5	Box, cover & (2) lampholders	Gray	Boxed	4	IIIIIIII
5829-6	Box, cover & (2) lampholders	White	Boxed	4	IIIIIIII
5829-10	Box, cover & (2) lampholders	Bronze	Boxed	4	IIIIIIII
5841-5	Box, cover, photocell & (2) lampholders	Gray	Clamshell	4	IIIIIIII

See end of section (Pg D54) for detailed drawings »

Metallic Garden Lights

Applications

- For accent lighting along walkways, driveways, terraces, porches and garden areas

Product Features

- Rugged die-cast construction
- Durable powder coat finish provides maximum weatherability and scratch-resistance
- Standard medium base screw-in bulb socket (E26) is compatible with the widest range of bulbs including Incandescent, CFL, LED, Vintage, Flickering and others.
- Includes screw-in heavy-duty clear glass globe, wire connectors, gasket, and multilingual instructions
- Long 18″ wire leads for ease of installation
- Standard 1/2″ NPT Mounting
- Three-tier lights rated for 60W maximum lamps
- Four-tier lights rated for 100W maximum lamps

Compliance

- File E225082
- NEC® Compliant
- NEMA 3R

5884-8

5893-8

5694-0

5695-0

Metallic Garden Lights

Catalog #	Description	Color	Pkg. Type	Std. Pkg.	Bar Code
Heavy-Duty 120V Landscape Tier Lights					
5884-8	3-Tier	Green	Box	2	IIIIIIII
5893-8	4-Tier	Green	Box	2	IIIIIIII
Replacement Globes					
5694-0	For 3-tier	Clear	Carton	4	IIIIIIII
5695-0	For 4-tier	Clear	Carton	4	IIIIIIII

See end of section (Pg D54) for detailed drawings »

Motion Sensor Switch

Applications

- Use to install hands-free motion activated control of outdoor lighting
- Installs into lampholder/cluster covers or junction boxes with 1/2″ threaded outlets

Product Features

- Swivel joint for easy aiming
- 180° motion sensor with duration, sensitivity and photocell controls
- Standard 1/2″ threaded mount
- 120VAC
- LED compatible

Compliance

- File E0123456789
- NEC® Compliant
- NEMA 3R

5639-5

5639-6

5639-7

Motion Sensor Switch

Catalog #	Description	Outer Ctn. Qty.	Std. Pkg.	Bar Code
5639-5	Weatherproof motion sensor switch, Gray	10	1	IIIIIIII
5639-6	Weatherproof motion sensor switch, White	10	1	IIIIIIII
5639-7	Weatherproof motion sensor switch, Bronze	10	1	IIIIIIII

Photocell Switch

Applications

- Use for darkness activated automatic control of night lighting from dusk to dawn
- Control porch lights, garden lights, post lanterns, barn lights, loading dock lights, outdoor signs etc.

Product Features

- Durable weatherproof construction
- Built-in time delay prevents operation triggered by vehicle headlights or other temporary light flashes
- For use with conventional incandescent lighting including halogen bulbs. (Not compatible with most LED lights.)

5638-5

PE100

Photoelectric Eye Switch

Catalog #	Description	Color	Pkg. Type	Std. Pkg.	Bar Code
5638-5	Swivel Switch, locknut 2000W Tungsten 1800VA Ballast 120V 50-60HZ	Gray	Carded	6	IIIIIIII
PE100	Outdoor Photoelectric Switch Rated 1000 Watts, Fits 1/2″ Hole	Black	Poly Bag	10	IIIIIIII

See end of section (Pg D54) for detailed drawings »

Metal and Non-metallic Closure Plugs

Applications

- For use with weatherproof boxes, extension adapters, cluster covers and round splice boxes to seal off unused outlets

Product Features

- All metal closure plugs come with durable powder coat finish except the gray color of the 5269 and 5270 series, which are bare corrosion resistant die-cast zinc
- All nonmetallic closure plugs are solid molded-in color

Compliance

- File E195973
- File E123456789 (CP line)
- NEC® Compliant
- NEMA 3R

Metal and Nonmetallic Closure Plugs

Catalog #	Description	Color	Pkg. Type	Std. Pkg.	Bar Code
Closure Plugs - 1/2" NPT					
5269-0	Metallic	Gray	Polybag of 4	75 bags*	IIII
5269-5	Metallic	Gray	Card of 3	12 cards**	IIII
CP5050S	Metallic	Gray	Box of 50	10 (500)	IIII
5269-9	Metallic	Gray	Bulk	1000	
CP450WH	Metallic	White	Polybag of 4	30 bags*	IIII
CP5050WH	Metallic	White	Box of 50	10 (500)	IIII
CP450Z	Metallic	Bronze	Polybag of 4	30 bags*	IIII
CP5050Z	Metallic	Bronze	Box of 50	10 (500)	IIII
CP47550S	Metallic Assortment	Gray	Polybag of (2) 1/2" (2) 3/4"	30 bags*	IIII
5269-1	Nonmetallic	White	Polybag of 4	75 bags*	IIII
5269-6	Nonmetallic	White	Card of 3	12 cards**	IIII
5269-2	Nonmetallic	Bronze	Polybag of 4	75 bags*	IIII
5269-7	Nonmetallic	Bronze	Card of 3	12 cards**	IIII
PCP47550GY	Nonmetallic Assortment	Gray	Polybag of (2) 1/2" (2) 3/4"	30 bags*	IIII
PCP47550WH	Nonmetallic Assortment	White	Polybag of (2) 1/2" (2) 3/4"	30 bags*	IIII
Closure Plugs - 3/4" NPT					
5270-0	Metallic	Gray	Polybag of 4	75 bags*	IIII
5270-5	Metallic	Gray	Card of 3	12 cards**	
CP5075S	Metallic	Gray	Box of 50	10 (500)	IIII
5270-9	Metallic	Gray	Bulk	1000	
CP475WH	Metallic	White	Polybag of 4	30 bags*	IIII
CP475Z	Metallic	Bronze	Polybag of 4	30 bags*	IIII
5270-1	Nonmetallic	White	Polybag of 4	75 bags*	
Closure Plugs - 1" NPT					
CP4100S	Metallic	Gray	Polybag of 4	75 bags*	IIII
5271-0	Nonmetallic	Gray	Polybag of 4	75 bags*	IIII

**Order in 4-pack bag quantities only – not per piece **Order in 3-pack card quantities only – not per piece.*

Metal Ground Stake

SG100S

Die Cast Aluminum Ground Spike

SG100S	9" stake fits 1/2" threaded outlets	Gray	Adhesive Tag	12	IIIIIII

See end of section (Pg D54) for detailed drawings ».

Box Mounting Lugs

Applications

- Beveled corner mounting lugs with self tapping screws secures to back of box to provide range of mounting positions

5302-0

Box Mounting Lugs & Screws

Catalog #	Description	Color	Pkg. Type	Std. Pkg.	Bar Code
5302-0	–	–	100 Polybags of 2	100	IIIIIIII

Multi-Purpose Replacement Gaskets

Applications

- Replacement gaskets for outdoor boxes, covers, and lampholders

Product Features

- Each 1-gang gasket has cut outs to fit a multitude of configurations including horizontal or vertical toggle switch, round receptacles (1.4", 1.6", 2.15" diam.), GFCI/ decorator and large rectangular opening
- Each 2-gang and 3-gang gasket has cut outs to fit a multitude of configurations including toggle switches, round receptacles (1.4" diam.), duplex receptacles, GFCI/ decorator and large rectangular opening
- 5017-0 Lampholder Gasket Assortment includes multi-purpose 1-gang and round box/ cover gaskets plus (4) interior lampholder gaskets that fit various models of lampholders and lampholder kits including the BELL: 5620, 5621, 5624, 5624, 5625, 5883, 5818, 5829, and 5841

5019-0

GS100

5020-0

GS400

GK300

5017-0

GK240

5611-0

Weatherproof Gaskets

Catalog #	Description	Pkg. Type	Std. Pkg.	Bar Code
5019-0	(2) 1-Gang Multiple Configuration Gaskets	Cellophane Bag	20	IIIIIIII
GS100	(2) 1-Gang Multiple Configuration Gaskets - TayMac	Poly Bag	10	IIIIIIII
5020-0	(2) 2-Gang Multiple Configuration Gaskets	Cellophane Bag	20	IIIIIIII
GS400	(2) 3-Gang Multiple Configuration Gaskets	Poly Bag	10	IIIIIIII
GK300	Assortment: (2) 1-Gang, (2) 2-Gang and (2) Round Box/Cover	Poly Bag	10	IIIIIIII
5017-0	Lampholder Gasket Assortment	Cellophane Bag	20	IIIIIIII
5611-0	Lampholder Exterior Gasket fits: 5612-0	Poly Bag	15	IIIIIIII
GK240	(2) Lampholder Exterior Gaskets fit: LTS100 and PLTS100	Poly Bag		IIIIIIII

See end of section (Pg D55) for detailed drawings »

Non-metallic Outdoor Ceiling Fan/Luminaire Boxes

Ceiling Fan & Luminaire Boxes

Applications

- Provides a safe and secure mounting and weatherproof wiring junction for outdoor fans, chandeliers or pendant lights
- Designed to enhance outdoor living spaces with the same convenience and comfort as indoors
- Perfect for porches, covered patios, pergolas

Product Features

- Support fans up to 70lbs or heavy luminaires up to 150lbs
- Constructed of heavy duty PVC with integrated galvanized steel support bracket
- Five 3/4″ threaded entries for conduit or fittings with four closure plugs
- Includes three reducer bushings (3/4″ to 1/2″)
- Box mounts parallel, perpendicular or 45° from a joist

Compliance

- Listed
- NEC Compliant
- NEMA 3R

Safe & Secure
with a properly rated box!

PRCF57550GY

PRCF57550WH

PRCF57550BZ

Outdoor Comforts™
Enhance Your Outdoor Space!

4″ Non-metallic Outdoor Round Box, 1-1/2″ Deep - Heavy Duty PVC w/Integrated Galvanized Steel Support Bracket

Catalog #	Description	Cu. In. Capacity (When Used W/Collar)	Threaded Entries	Recommended Max. Loads		Std. Pkg.	Bar Code
				Ceiling Fan (Dynamic) Lbs.	Fixture (Static) Lbs.		
PRCF57550GY	Ceiling Fan Luminaire Box, Gray	16.0″	(5) 3/4″ or 1/2″	70	150	4	IIIIIIII
PRCF57550WH	Ceiling Fan Luminaire Box, White	16.0″	(5) 3/4″ or 1/2″	70	150	4	IIIIIIII
PRCF57550BZ	Ceiling Fan Luminaire Box, Bronze	16.0″	(5) 3/4″ or 1/2″	70	150	4	IIIIIIII

See end of section (Pg Bxx) for detailed drawings »

Outlet Boxes

Applications

- For general use whenever weatherproof protection is required

Product Features

- Durable high impact PVC construction
- Can be used for 1/2″ and 3/4″ conduit
- Includes 3/4″ closure plugs and reducer bushings in matching gray or white

Compliance

- UL Marine Listed
- NEC Compliant
- NEMA 3R

PSB37550GY
PSBD37550GY

PSB37550WH
PSBD37550WH

PDB77550GY
PDBD77550GY

PDB77550WH
PDBD77550WH

PRB57550GY

PRB57550WH

Non-metallic Boxes - Outlet Boxes

Catalog #	Description	CU. IN. (CM3)	COLOR	PKG. TYPE	Std. Pkg.	Bar Code
2″ Deep 1-Gang Outlet Boxes - Three Threaded Outlets						
PSB37550GY	(3) 1/2″ or 3/4″ Holes	16.5 (270.4)	Gray	Shrink	8	IIIIIIII
PSB37550WH	(3) 1/2″ or 3/4″ Holes	16.5 (270.4)	White	Shrink	5	IIIIIIII
2-5/8″ Deep 1-Gang Outlet Boxes - Three Threaded Outlets						
PSBD37550GY	(3) 1/2″ or 3/4″ Holes	19.5 (319.5)	Gray	Shrink	8	IIIIIIII
PSBD37550WH	(3) 1/2″ or 3/4″ Holes	19.5 (319.5)	White	Shrink	8	IIIIIIII
2″ Deep 2-Gang Outlet Boxes - Seven Threaded Outlets						
PDB77550GY	(7) 1/2″ or 3/4″ Holes	26.5 (434.3)	Gray	Shrink	6	IIIIIIII
PDB77550WH	(7) 1/2″ or 3/4″ Holes	26.5 (434.3)	White	Shrink	6	IIIIIIII
2-5/8″ Deep 2-Gang Outlet Boxes - Seven Threaded Outlets						
PDBD77550GY	(7) 1/2″ or 3/4″ Holes	33.5 (549.0)	Gray	Shrink	6	IIIIIIII
PDBD77550WH	(7) 1/2″ or 3/4″ Holes	33.5 (549.0)	White	Shrink	6	IIIIIIII
Round Outlet Box - Five Threaded Outlets						
PRB57550GY	(5) 1/2″ / 3/4″ Holes 1.5″ Depth	13.5 (221.2)	Gray	Shrink	8	IIIIIIII
PRB57550WH	(5) 1/2″ / 3/4″ Holes 1.5″ Depth	13.5 (221.2)	White	Shrink	8	IIIIIIII

See end of section (Pg D56) for detailed drawings »

Non-metallic Covers

Blank Covers

Applications

- For general use whenever weatherproof protection is required

Product Features

- Durable high impact polycarbonate construction
- Includes attached gasket and mounting hardware

Compliance

- UL Marine Listed
- File E116141
- NEC® Compliant
- NEMA 3R

PBC100GY

PBC100WH

PBC200GY

PBC200WH

PBC300GY

PBC300WH

Blank Covers

Catalog #	Description	Color	Pkg. Type	Std. Pkg.	Bar Code
PBC100GY	Blank	Gray	Shrink	12	IIIIIIII
PBC100WH	Blank	White	Shrink	12	IIIIIIII
PBC200GY	Blank 2-Gang	Gray	Shrink	10	IIIIIIII
PBC200WH	Blank 2-Gang	White	Shrink	10	IIIIIIII
PBC300GY	Blank Round	Gray	Shrink	10	IIIIIIII
PBC300WH	Blank Round	White	Shrink	10	IIIIIIII

Toggle / Device Covers

Applications

- For general use whenever weatherproof protection is required

Product Features

- Durable high impact polycarbonate construction
- Includes attached gasket and mounting hardware
- Horseshoe adapter ensures a snug fit for standard toggle sizes and can be removed to accommodate large toggles switches

Compliance

- File E116141
- NEC® Compliant
- NEMA 3R

PTC100GY
PTC100WH

PTC200GY

PTC521GY
PTC521WH

8-in-1 Configurations

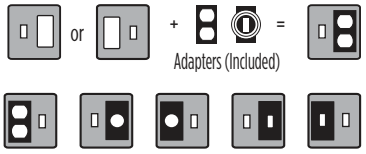

Non-metallic Covers - Toggle / Device Covers

Catalog #	Description	Color	Pkg. Type	Std. Pkg.	Bar Code
1-Gang Device Covers					
PTC100GY	Toggle	Gray	Shrink	5	IIIIIIII
PTC100WH	Toggle	White	Shrink	3	IIIIIII
2-Gang Device Covers					
PTC200GY	Toggle/Toggle	Gray	Shrink	3	IIIIIIII
PTC521GY	Toggle/GFCI	Gray	Shrink	3	IIIIIIII
PTC521WH	Toggle/GFCI	White	Shrink	4	IIIIIII

See end of section (Pg D57) for detailed drawings »

Lampholders

Applications

- For general outdoor lighting use in wet, damp or dry locations

Product Features

- Durable high impact PBT construction
- Locking swivel joint assures positive lamp positioning and easy pinpoint directional aiming
- Includes attached gasket and mounting hardware

Compliance

- File 0123456789
- NEC® Compliant
- NEMA 3R

PLTS100GY

PLTS100WH

CFL and LED Compatible

Multidirectional Swivel Joint

Lampholder Covers

PLV330GY

PLV330WH

Non-metallic Lighting - Lampholder Covers

Catalog #	Description	Color	Pkg. Type	Std. Pkg.	Bar Code
Lampholders PAR38					
PLTS100GY	Swivel Lampholder	Gray	Shrink	12	IIIIIIII
PLTS100WH	Swivel Lampholder	White	Shrink	12	IIIIIIII
Lampholder Covers					
PLV330GY	Three 1/2" Holes	Gray	Shrink	8	IIIIIIII
PLV330WH	Three 1/2" Holes	White	Shrink	8	IIIIIIII

See end of section (Pg D58) for detailed drawings »

Detailed Drawings

Die-Cast Aluminum Boxes and Extension Rings

1-GANG BOXES (General Dimensions)

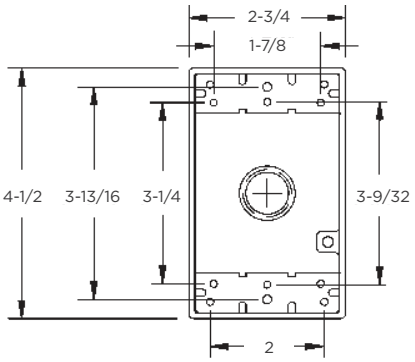

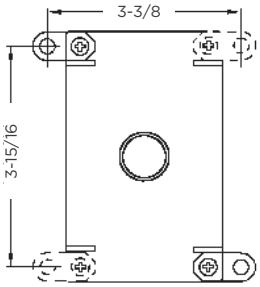

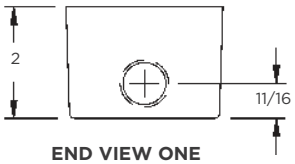

END VIEW ONE OUTLET

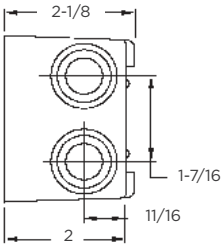

END VIEW TWO OUTLET

EXTENSIONS: 5406-0

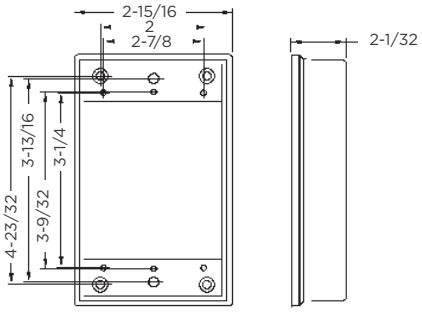

EXTENSIONS: 5399-0, 5403-0

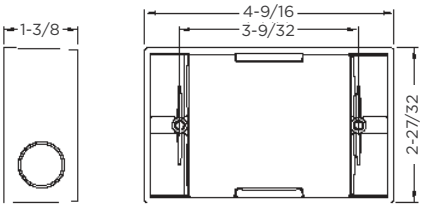

EXTENSIONS: 5400-0 SERIES

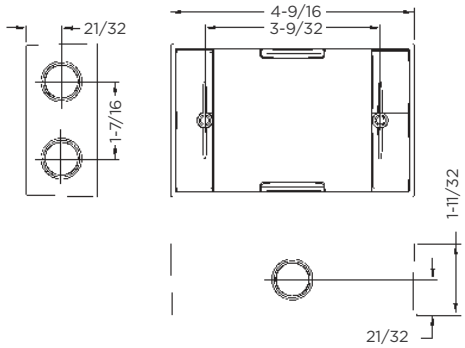

SWING ARM EXTENSION ADAPTERS: 5412-0 to 5415-0

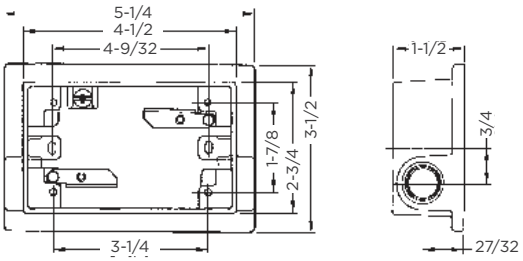

2-GANG BOXES (General Dimensions)

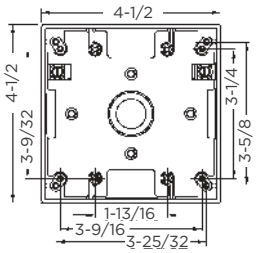

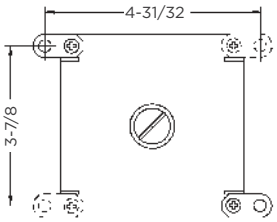

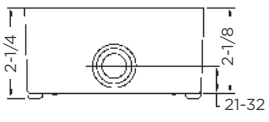

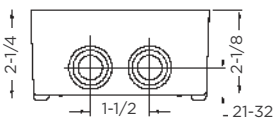

End view for styles with two outlets on one end

Default unit of measure is inches if not specifically indicated in a drawing.

Die-Cast Aluminum Boxes and Extension Rings

2-GANG BOXES WITH 7 OUTLETS
CAT. NOs. 5340-0, 5348-0

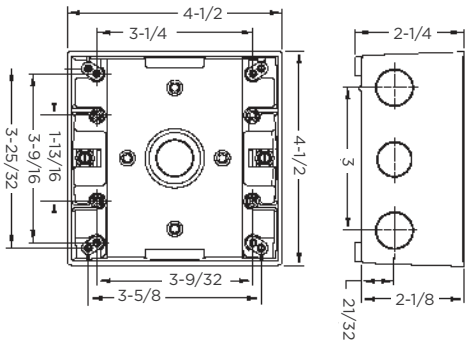

CAT. NOs. 5338-0, 5346-0

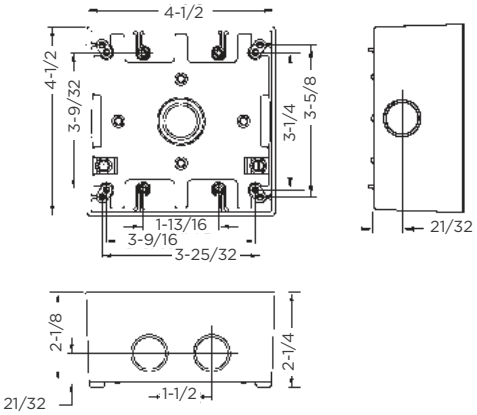

2-GANG BOXES WITH 5 OUTLETS
CAT. NOs. 5388-0, 5389-0

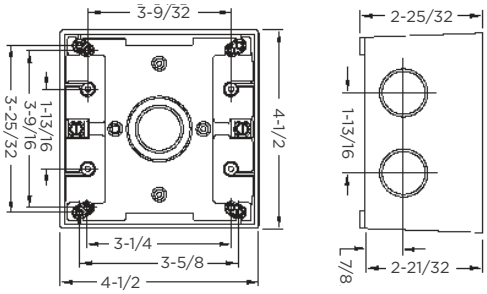

2-GANG EXTENSION

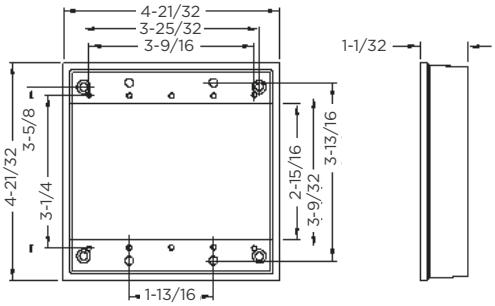

3-GANG BOX

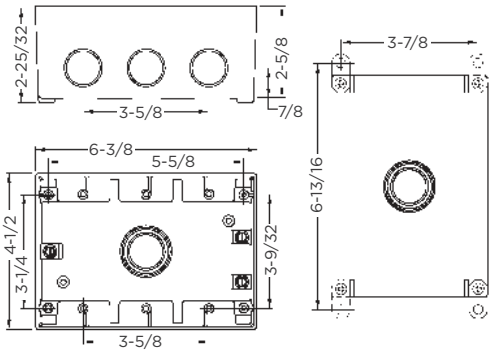

4" ROUND SPLICE BOXES

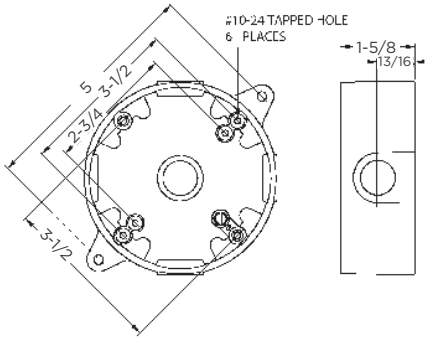

4" ROUND EXTENSION ADAPTERs

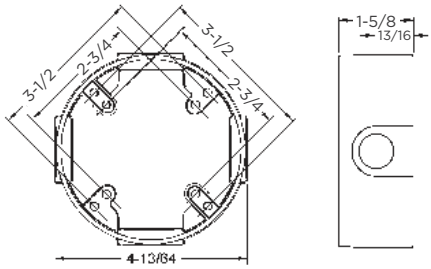

Default unit of measure is inches if not specifically indicated in a drawing.

Detailed Drawings

Metal 1-Gang Device Covers

MX1050

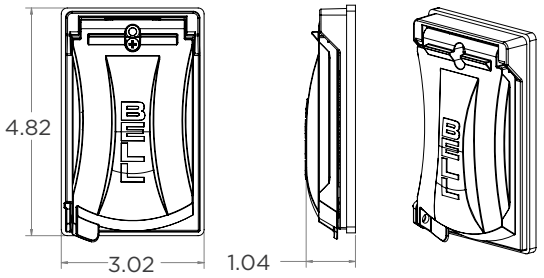

MX1250

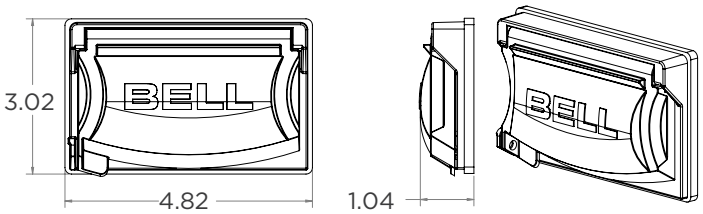

MX1550

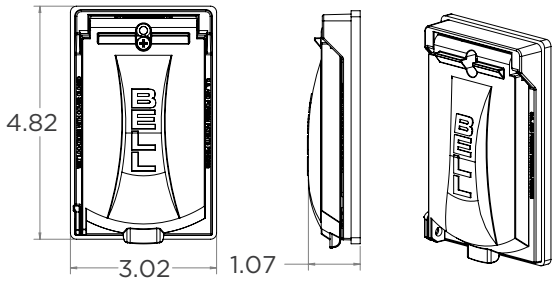

RAYNTITE® 1-GANG DEVICE COVERS – VERTICAL

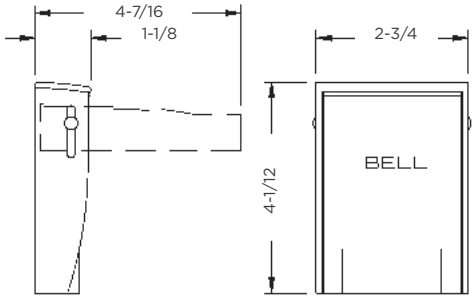

RAYNTITE® 1-GANG DEVICE COVERS – HORIZONTAL

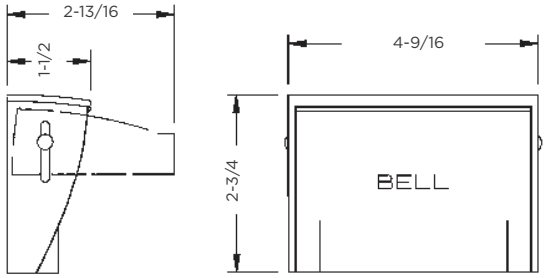

GFCI STYLE COVERS

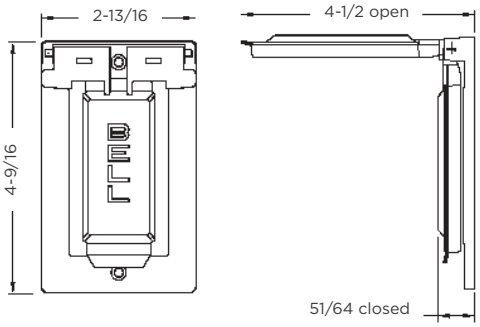

DUPLEX STYLE COVER

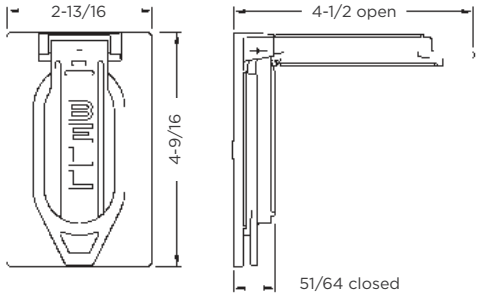

SINGLE RECEPTACLE STYLE COVERS

Note: device-mount and box-mount cover dimensions are the same

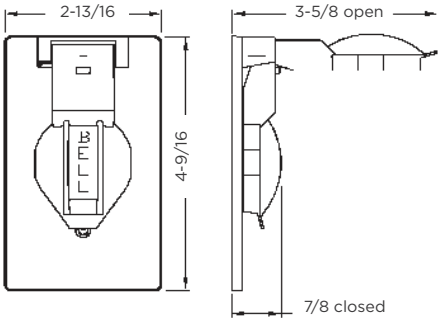

Default unit of measure is inches if not specifically indicated in a drawing.

Metal 1-Gang Device Covers

CAT. NOs. 5180-0 series

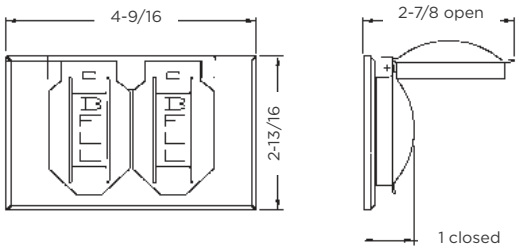

CAT. NO. 5101-0 series

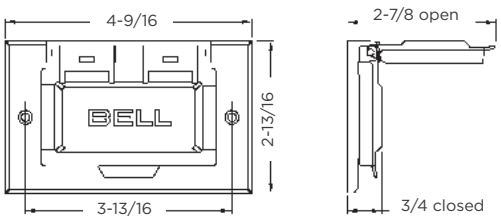

CAT. NO. 5102-0

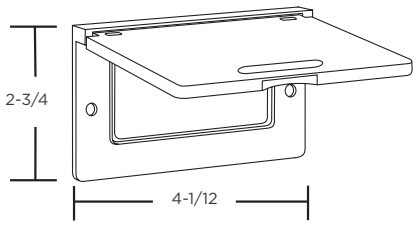

CAT. NO. 5152-0

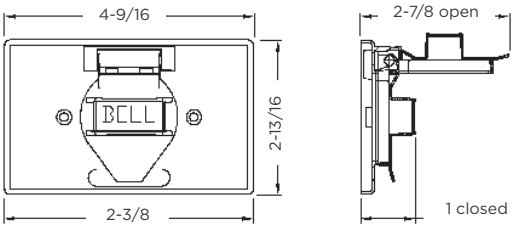

CAT. NO. 5153-0

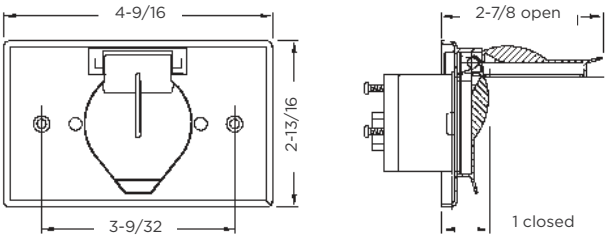

CAT. NO. 5712-5WRTR

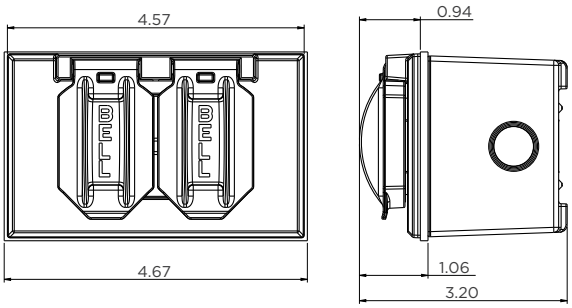

Metallic 2-Gang Device Covers

MX2050

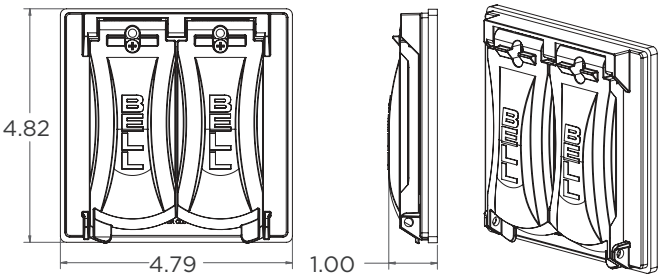

MX2150

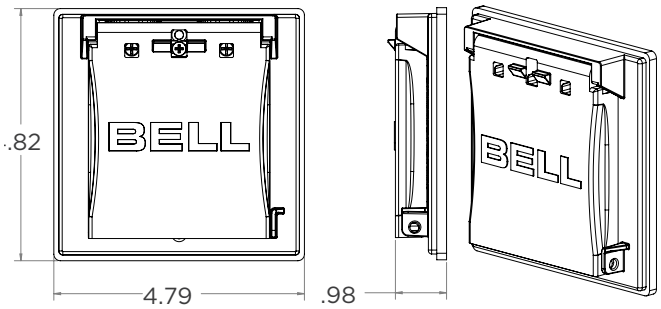

Default unit of measure is inches if not specifically indicated in a drawing.

Detailed Drawings

Metal 1-Gang Locking Cover

4600RAC

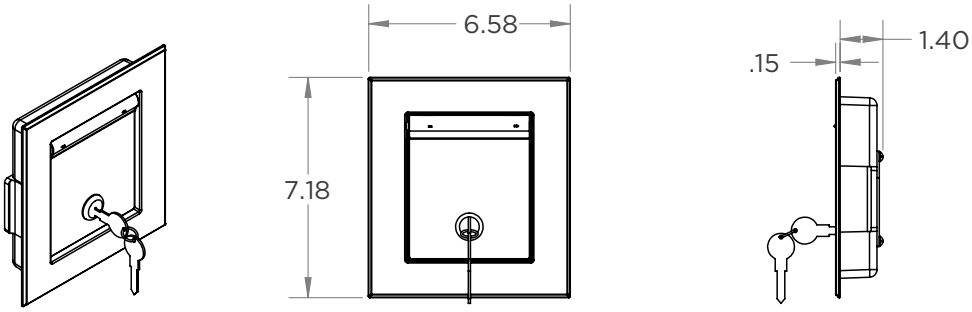

Metal 2-Gang Device Covers

RAYNTITE®

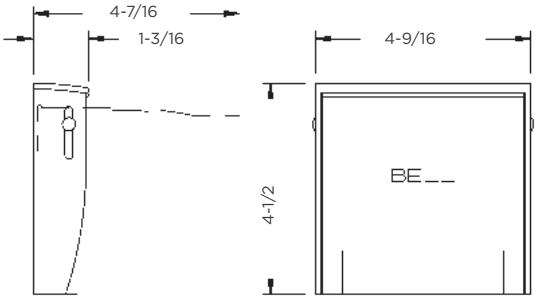

2-GANG DEVICE COVERS
5148-0 SERIES

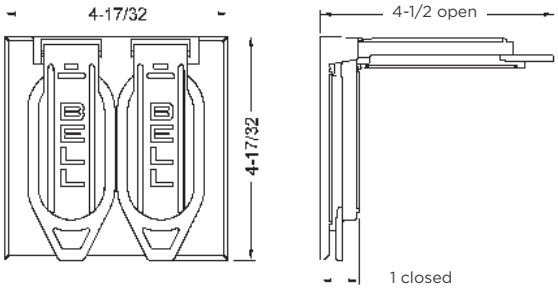

5145-0

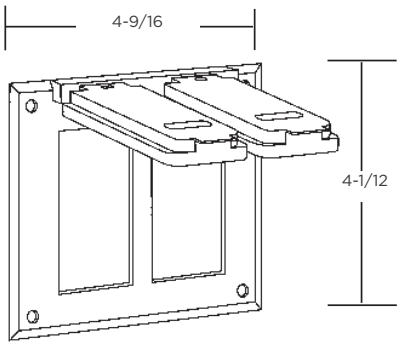

5157-0

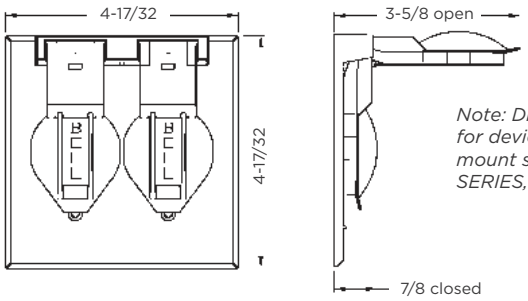

Note: Dimensions are the same for device mount and box mount styles shown. 5157-0 SERIES, 5092-0

Metal 3-Gang Device Covers

MX3050

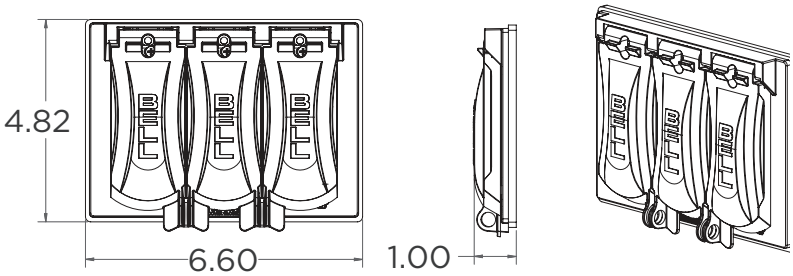

Default unit of measure is inches if not specifically indicated in a drawing.

Box Mount Flip Cover

5093-0

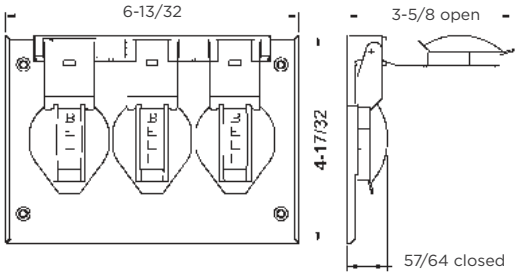

Flip Cover Combos and Kits

MK1250, 5874-5, 5874-6

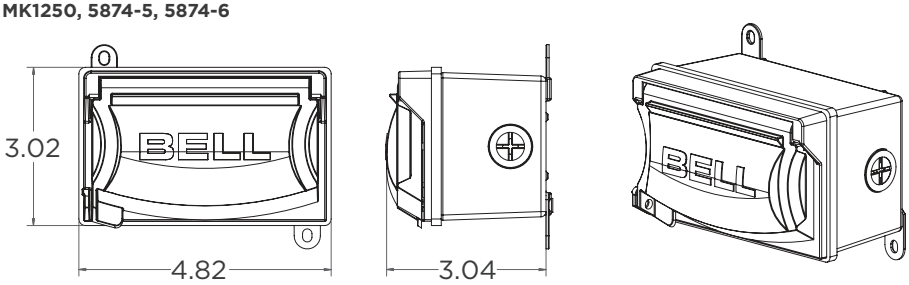

Metal Covers

1-Gang Blank Covers

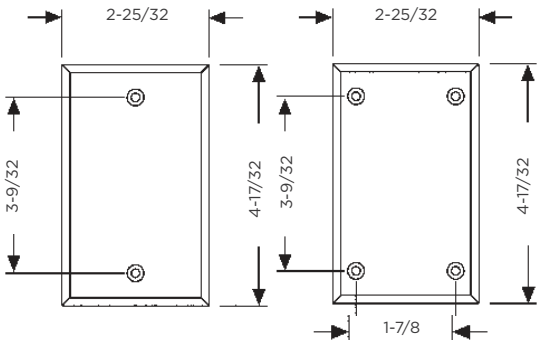

DEVICE MOUNT **BOX MOUNT**

2-Gang

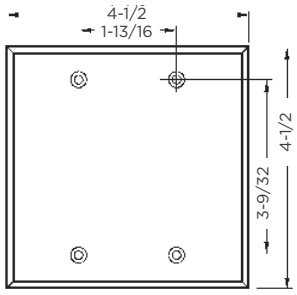

3-Gang

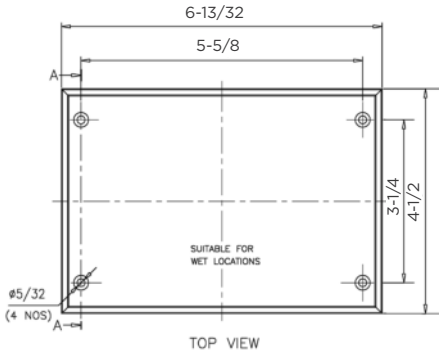

Default unit of measure is inches if not specifically indicated in a drawing.

Detailed Drawings

Metal Round Box Cover

4" Round Cover

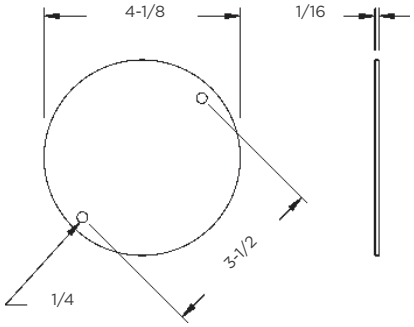

ROUND CLOSURE PLATES
CATALOG NO. 5652-1

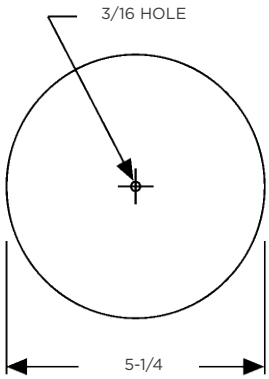

CATALOG NO. 5653-1

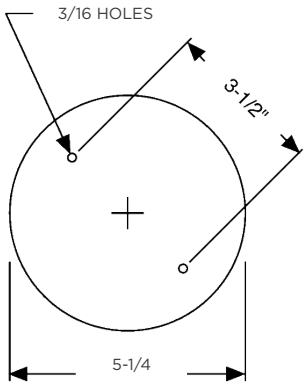

CATALOG NO. 5654-1

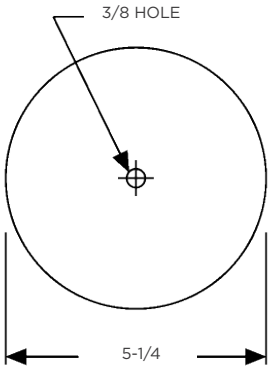

Metal Rocker Switch Covers

Decorator Cover Series

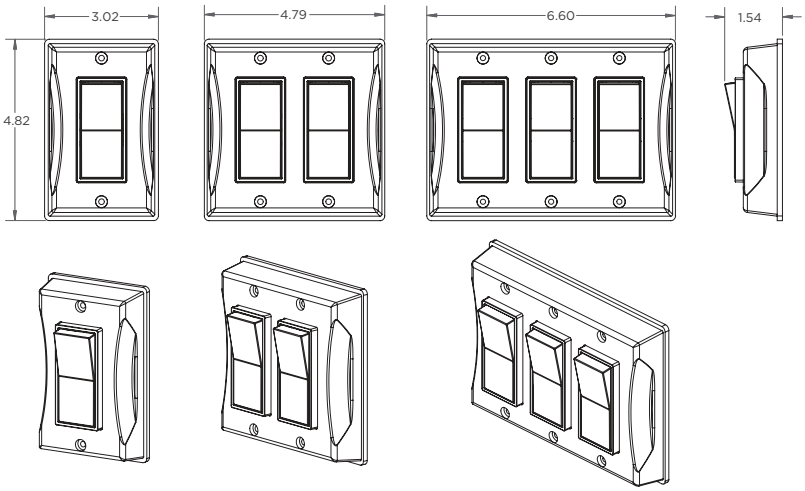

Default unit of measure is inches if not specifically indicated in a drawing.

Metal Toggle Switch Covers

1-GANG
5121 SERIES, 5141 SERIES
CAT. NOS. 5128-0, 5137-0

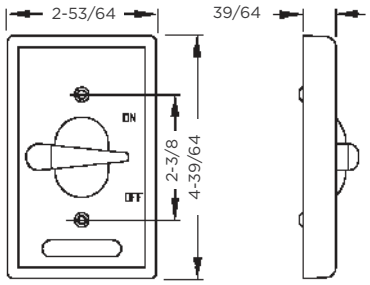

2-GANG
CAT. NO. 5124-0, 5125 SERIES

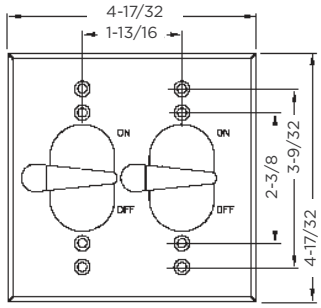

2-GANG 5167 SERIES

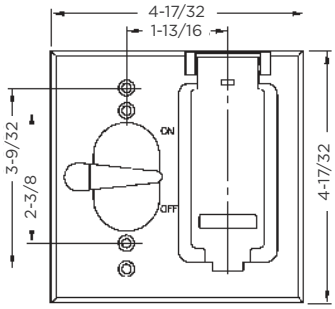

2-GANG 5166 SERIES

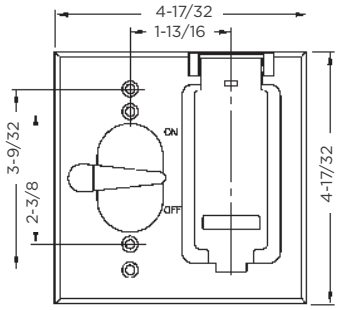

3-GANG
CATALOG NO. 5126-0

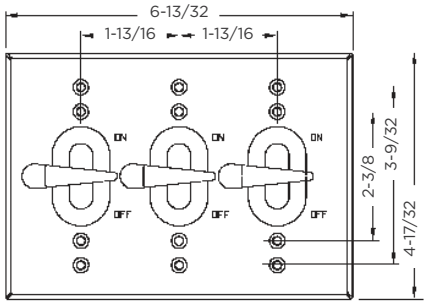

TOGGLE SWITCH
CATALOG NOS. 5201-0

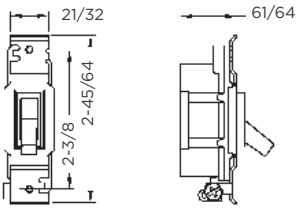

Metal Lampholder Covers

RECTANGULAR CLUSTER COVERS
5186 SERIES, 5189 SERIES

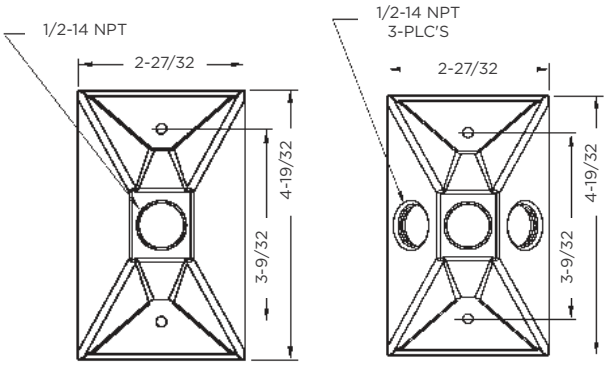

ROUND CLUSTER COVERS
5193 SERIES, 5197 SERIES

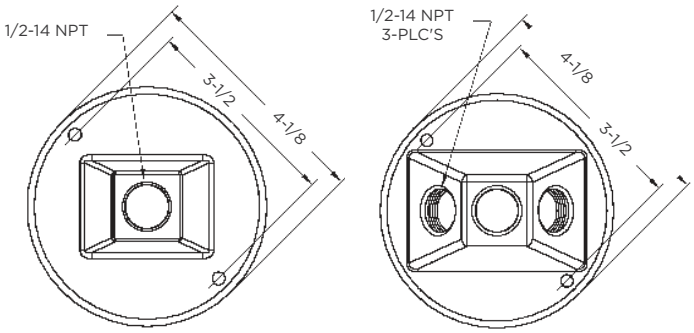

Default unit of measure is inches if not specifically indicated in a drawing.

Detailed Drawings

Metal Lampholders and Lighting

LAMPHOLDERS 5606 SERIES, 5612-0

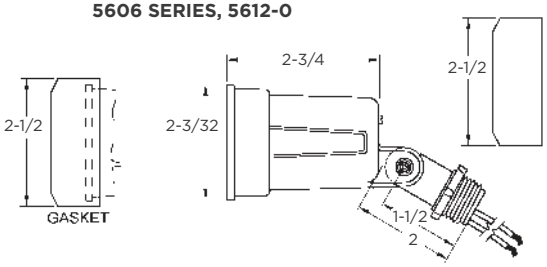

CATALOG NO. 5611-0

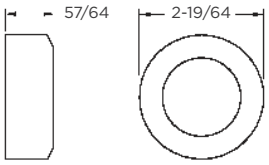

5613 SERIES

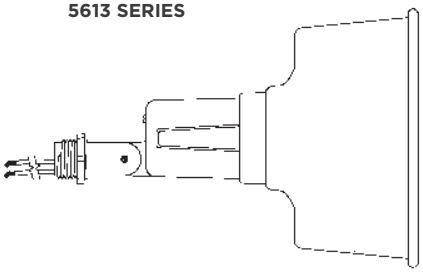

LHS100

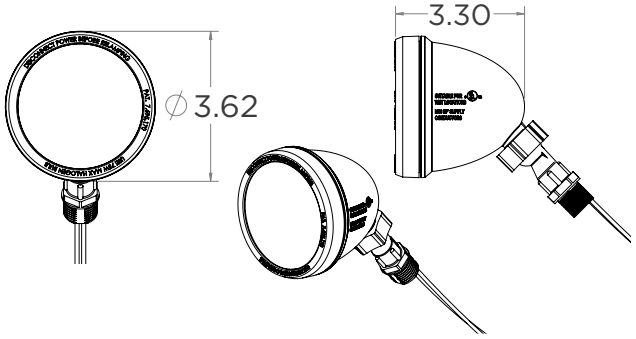

LTS100

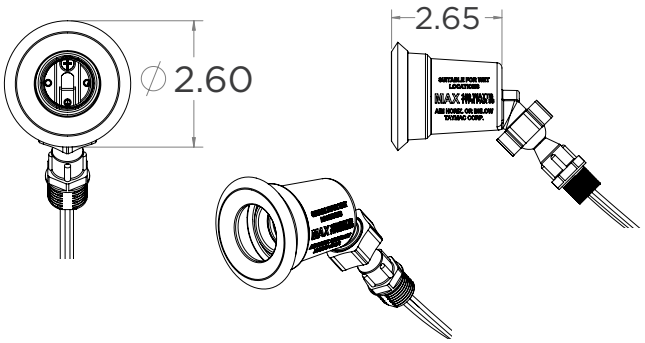

LL800

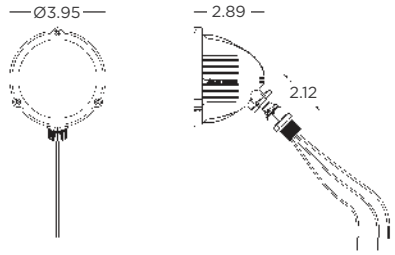

LL1200 / LL1251

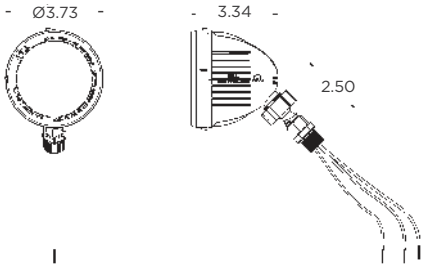

BULLET LAMPHOLDER ASSEMBLY 5820-8

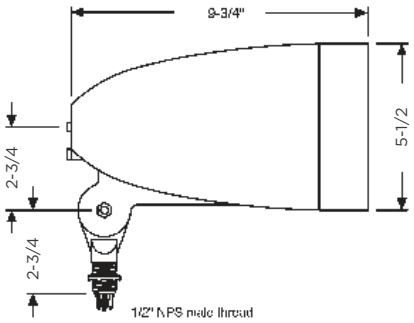

LED Kit with Motion Sensor Switch

5882

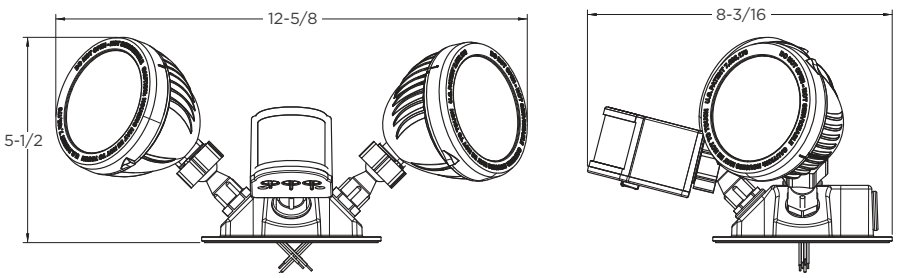

Default unit of measure is inches if not specifically indicated in a drawing.

Metal Portable Lampholders

SPLED2Z

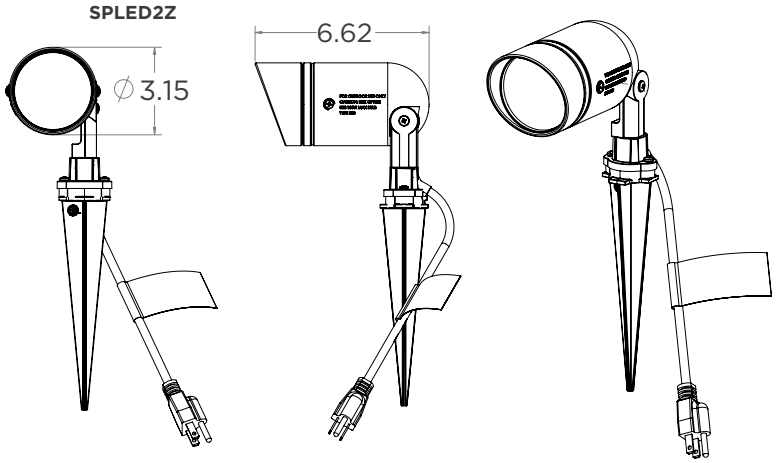

SPLED500Z

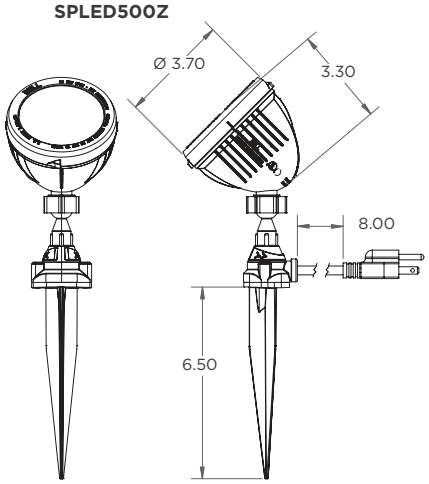

SL101B

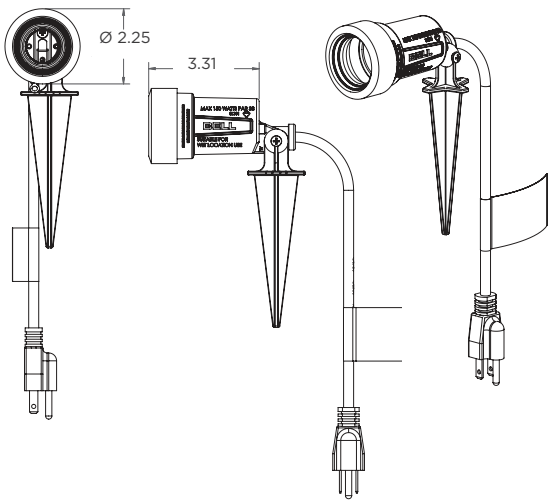

PORTABLE LAMPHOLDER ASSEMBLY 5792-0

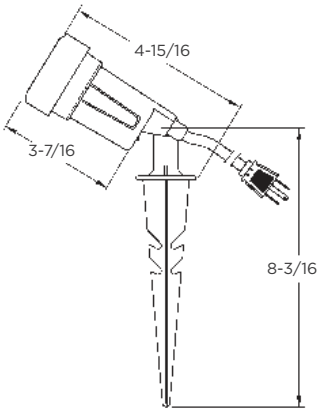

Metal Lampholder Combinations and Garden Light

5620 SERIES

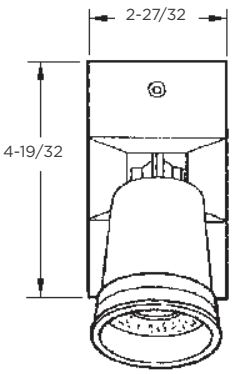

5621 SERIES

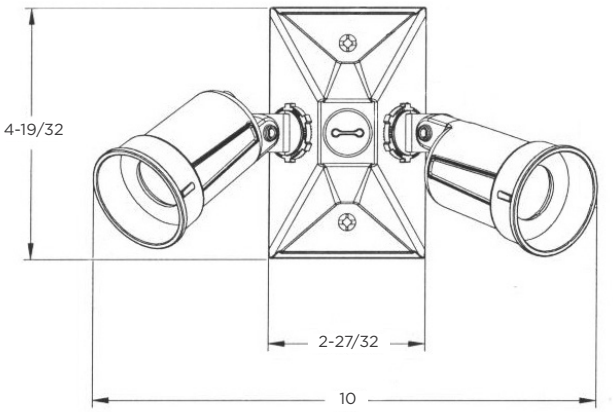

5624 SERIES

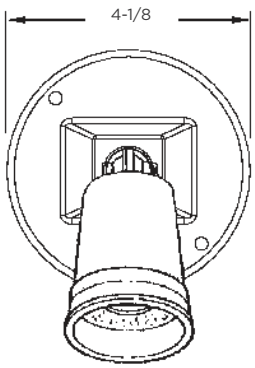

Default unit of measure is inches if not specifically indicated in a drawing.

Detailed Drawings

Metal Lampholder Combinations and Garden Light

5625 SERIES

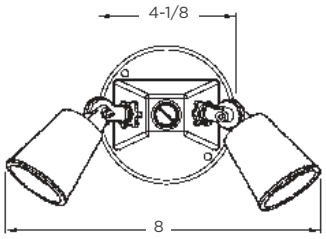

5884-8, 5893-8

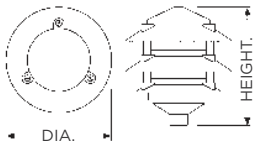

catalog #	dia.	height
5884-8	6″	7″
5893-8	6″	8-3/4″

REPLACEMENT GLOBE: 5694-0, 5695-0

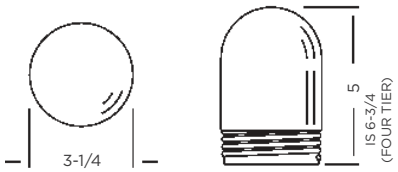

catalog #	dia.	height
5694-0	3-1/4″	5″
5695-0	3-1/4″	6-3/4″

Accessories

MOTION SENSOR SWITCH
5639 SERIES

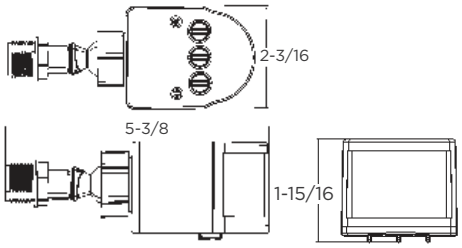

PHOTOSCELL
5638

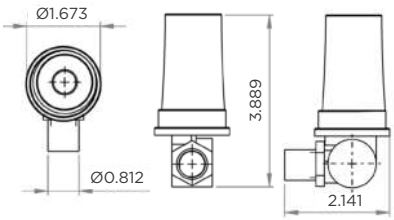

PE100

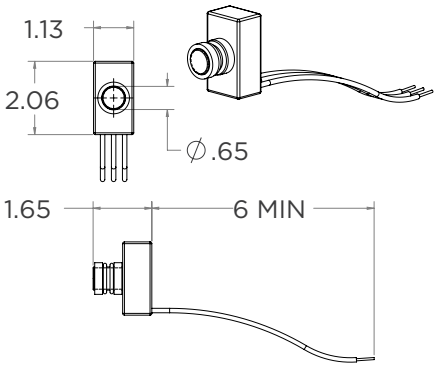

Accessories

BOX MOUNTING LUG
CATALOG NO. 5302-0

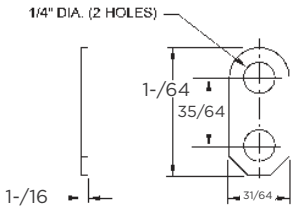

GASKET:
CATALOG NO. 5019-0

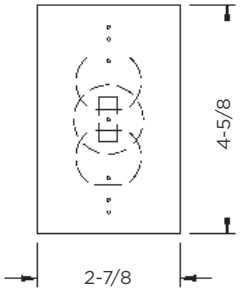

GASKET:
CATALOG NO. 5020-0

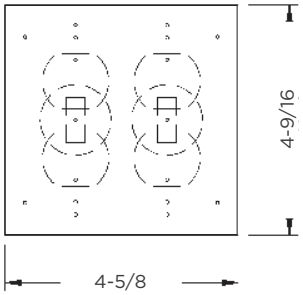

GASKETS:
CATALOG NO. 5017-0

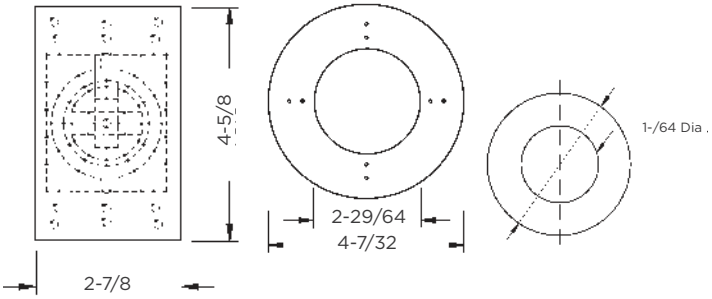

Default unit of measure is inches if not specifically indicated in a drawing.

Accessories

GK240

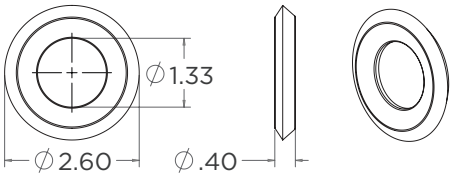

GS100

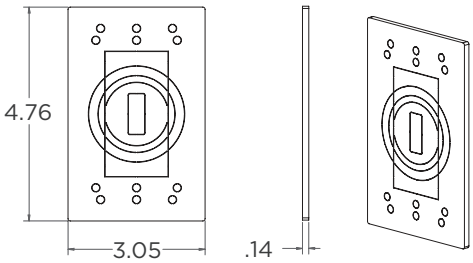

GS400

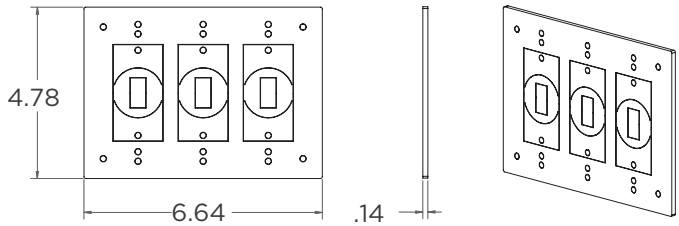

GK300

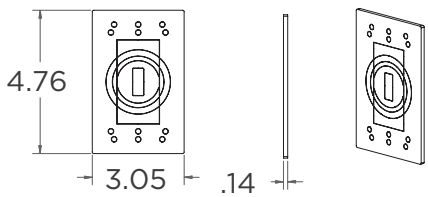

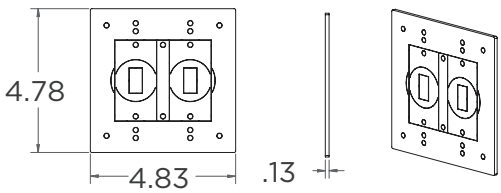

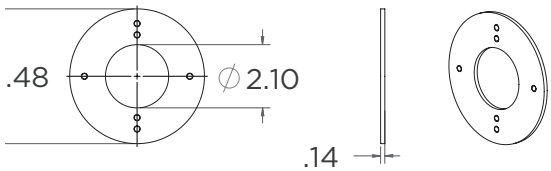

SG100S

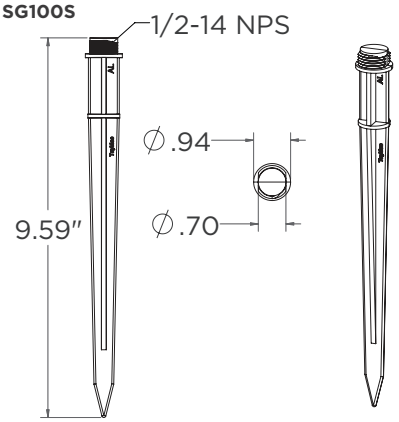

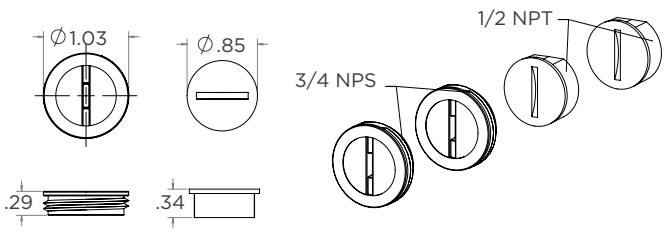

PCP47550

Default unit of measure is inches if not specifically indicated in a drawing.

Detailed Drawings

Non-metallic Boxes

PRCF57550

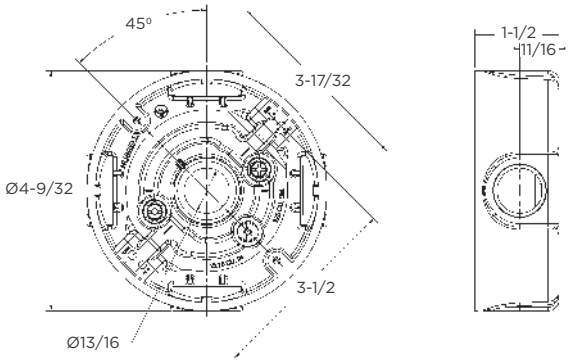

PSB37550

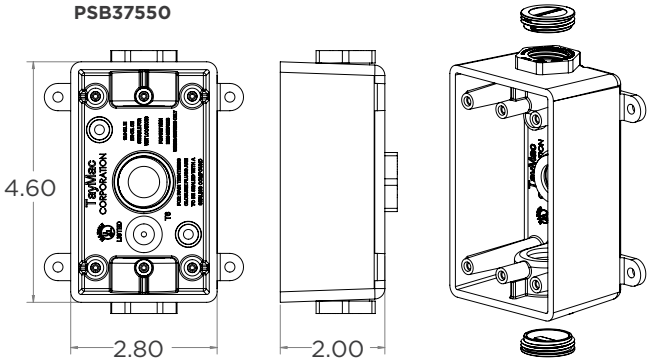

PRB57550

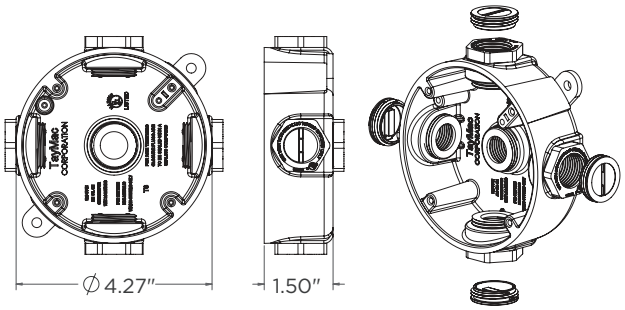

PDB77550G

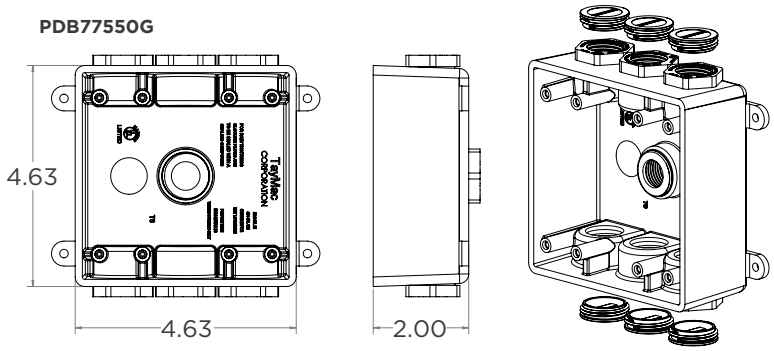

PDBD77550

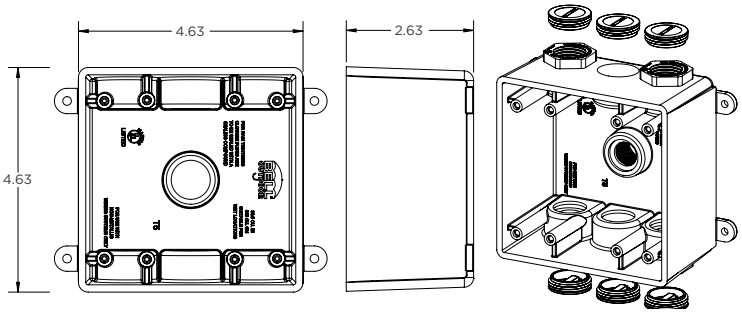

PSBD37550

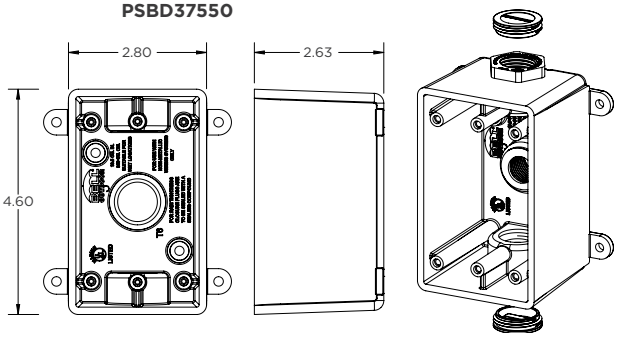

Default unit of measure is inches if not specifically indicated in a drawing.

Non-metallic Covers

PBC100

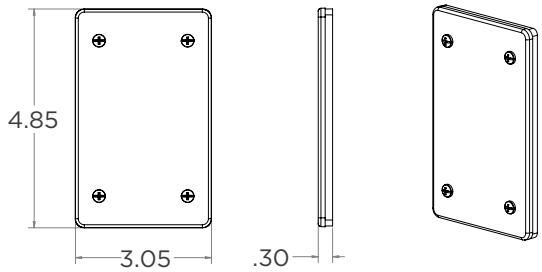

PBC200

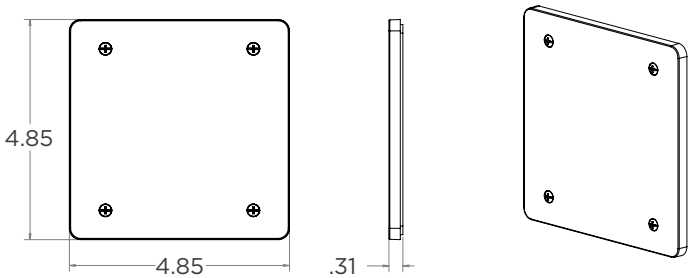

PBC300

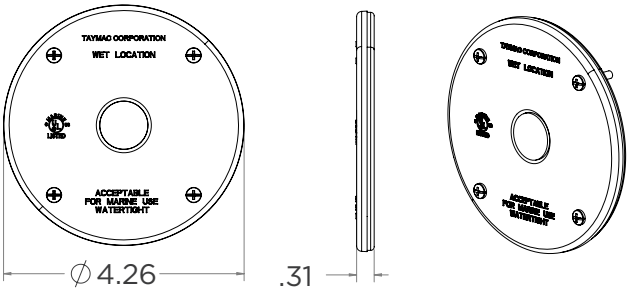

PTC200

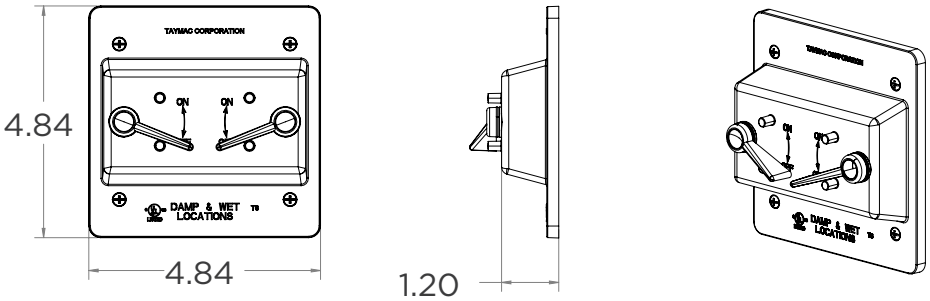

Default unit of measure is inches if not specifically indicated in a drawing.

Detailed Drawings

Non-metallic Lighting

PLTS100

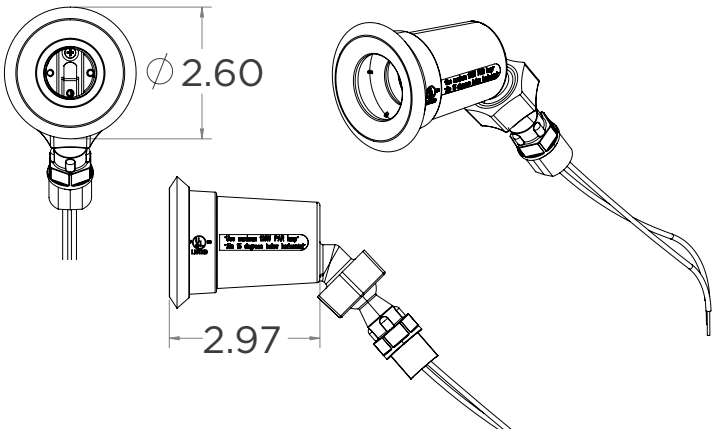

PLV330

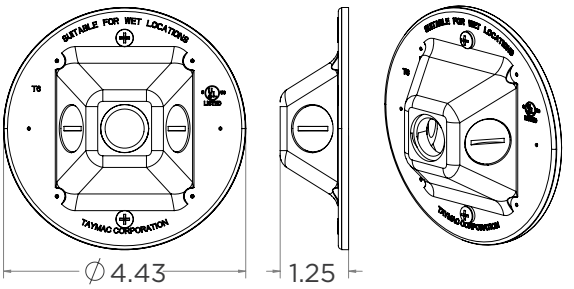

Default unit of measure is inches if not specifically indicated in a drawing.

Notes

Notes

Notes

Notes

Notes

Notes

Since 1896, RACO has consistently delivered high-quality steel electrical boxes. TayMac and BELL provide weatherproven™ outdoor electrical solutions.

GET IN TOUCH:

custserv@hubbell.com

(574) 234-7151

www.hubbell.com/raco

RACO
3902 W. Sample St.
South Bend, IN 46619

©2026 Wiring Device-Kellems. All rights reserved.
Hubbell and the Hubbell logo are registered trademarks or trademarks of Hubbell Incorporated. All other trademarks are the property of their respective owners.
HES-MULTI-CAT-EN-03988_D | 01/2026

A Hubbell brand collection